AUTHORISED MASTERMOVER DEALER, IRELAND

MasterMover AllTerrain ATP400

Product brochure

Supplied, serviced and supported in Ireland by AWE Forklifts

Phone +353 1 401 9919

Email info@awe.ie

Web awe.ie/mastermover?store-page=AllTerrain-ATP400-p35672401

Manufacturer brochure follows. Contact AWE for a written quote, demo or on-site visit.

MasterMover®

ATP400

Battery powered electric tug

ATP400

kg
5,000

Overview

The AllTerrain range enables the safe movement of heavy loads on castors and on rails. Featuring an intuitive design, this range enables a single operator to easily push and pull loads with little effort.

With a design focused on durability and performance even in tough environments, the AllTerrain range can work outside on rough flooring and on slopes. The AllTerrain range is suited to move heavy loads on both castors and rails.

With a range of couplings available, units can be used as plug-and-play pushers or to push, pull and steer heavy loads.

An optional remote control system is available to improve visibility and ease of pushing and pulling heavy loads during linear movements. An adjustable coupling height makes the range easy to integrate with existing systems and equipment.

Key Features

Safety

- Audible horn, flashing safety light, anti-crush button and emergency stop button
- Speed control with optional two-speed selector switch
- Optional remote control for maximum visibility on linear movements

Performance

- Heavy-duty industrial units able to work on rough terrain
- Puncture-proof, non-marking drive wheels able to gain traction on rough floor surfaces
- Durable design suited for working in the toughest of environments

Power

- Powerful AC motor optimises both speed and power
- Adaptable motor able to operate at slow and fast speeds and different acceleration rates
- High-performance AGM maintenance-free batteries

Connection

- Range of coupling options suited to moving loads on rails and castors
- Custom coupling designs available for specialist needs
- Secure bolt-on couplings for applications requiring controlled, powerful pulling movements
- Plug-and-play coupling options to push heavy wheeled loads

MasterMover

Dimensions

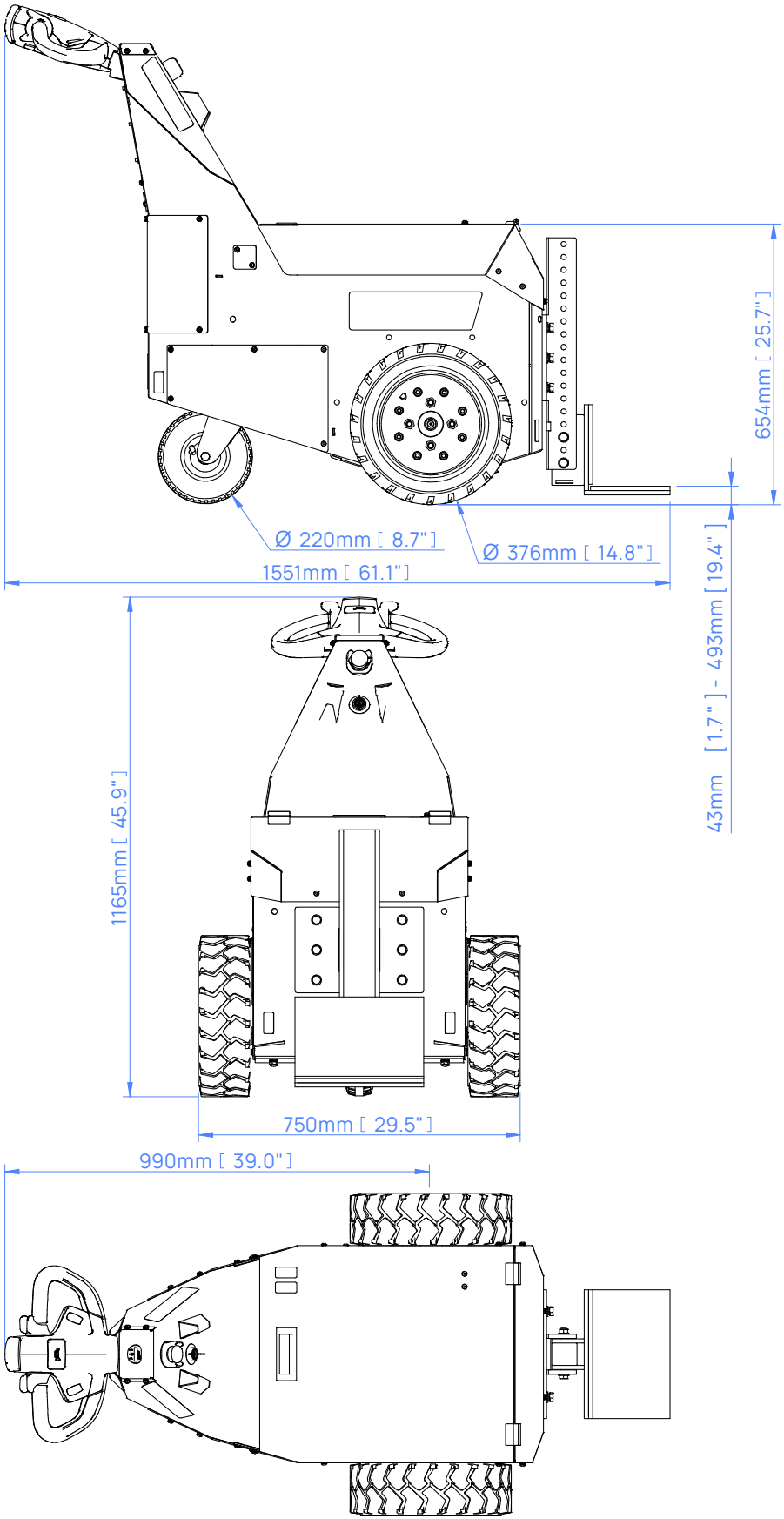
654mm [25.7"]
Ø 220mm [8.7"]
Ø 376mm [14.8"]
1551mm [61.1"]
43mm [1.7"] - 493mm [19.4"]
1165mm [45.9"]
750mm [29.5"]
990mm [39.0"]

Slope Performance

The force required to move a load is based on load weight, slope angle and floor condition. Movement on a slope increases the force required to safely start, stop and move the load.

If your application involves moving a load up or down a slope, speak to our team who will be happy to advise on which machine will meet your requirements.

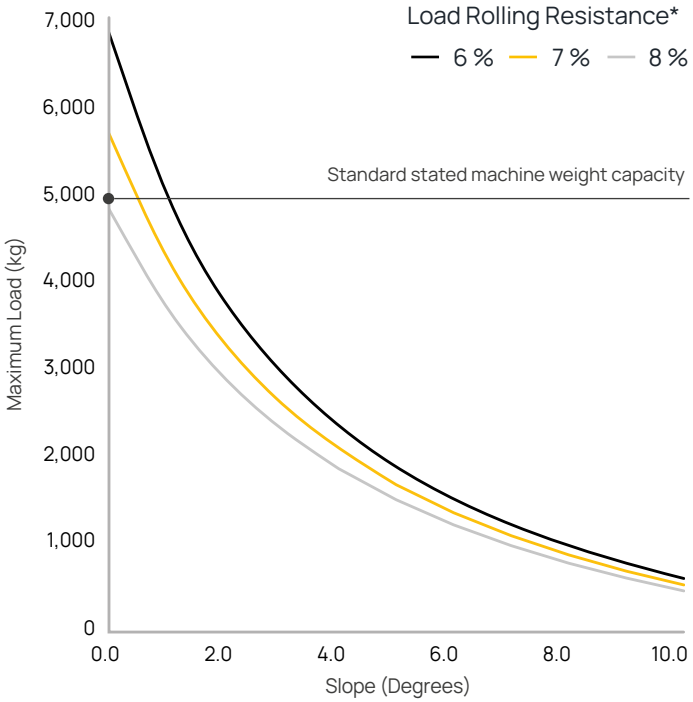

* Variables that affect rolling resistance include the quality of floor/terrain and the type/condition/quality of castor wheels.

In Application: AllTerrain

Machine Safety Features

Emergency Stop Button	Anti-Crush Button	Automatic Parking Brake
Warning Horn	**Battery Discharge Indicator**	**Suspension System**
		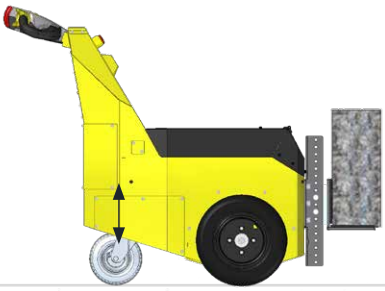
Key Switch		

Machine Options

Additional AGM Battery **Z40-00300**	Remote Control **Z40-00500**	Flashing Light & Motion Bleeper **Z40-00501**
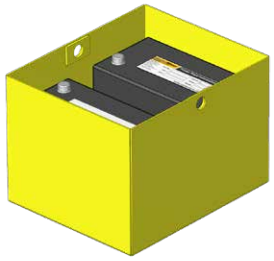		
Wheel Protectors **Z40-00502**	Two Speed Selector Switch **Z40-00505**	

Couplings

BoxCoupling
Z40-00601 male I Z40-00701 female

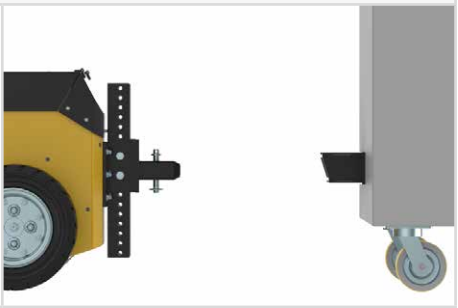

L Shaped Push Plate
Z40-00602 male

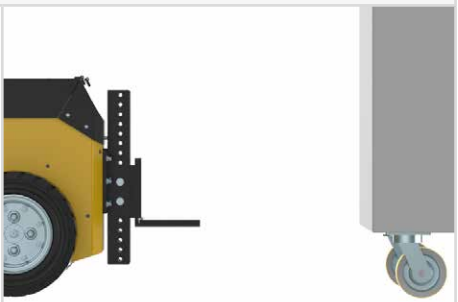

Push Plate
Z40-00603 male

York Coupling
Z40-00604 male

Couplings

Tetra Coupling
Z40-00605 male

Custom Engineering

We understand that every application is different. Whether it's a custom coupling to connect to your load, modifying our electric tugs to work in a challenging environment, or designing an entirely new solution for your application, our Customer Engineering team are here to help.

For more information on our custom engineering capabilities, please visit: **mastermover.com/custom-solutions**
If you'd like to discuss your requirements, speak to your sales representative or email: **sales@mastermover.com**

Technical Specification

Machine	
Product code	Z40-00101
Maximum load (on castors I on rails)	5,000 kg I 80,000 kg
Maximum force (push I pull)	3,924 N I 3,433 N
Machine weight	204 kg
Battery weight (standard 102Ah)	80 kg
Combined machine & battery weight (standard)	284 kg
Drive type	Electric
Braking	Regenerative
Parking brake	Electromagnetic
Drive wheel type	Solid Rubber
Castor wheel type	Foam Filled Rubber
Wheel diameter	375 mm
Drive motor power	2 kW
Controller type	AC
Standard machine speed	2 KPH
Hare mode speed (With two speed selector switch)	3 KPH
Tortoise mode speed (With two speed selector switch)	1.2 KPH
Maximum slope	10°
Voltage	24 v
Noise level	Motor ≤80 dBA I Flashing light ≤85 dBA I Horn ≤112 dBA
Metal work finish	Powder coat paint & zinc plated
IP rating	IP44
AGM Battery	
Product code	Z40-00300 I Z40-00301
Battery pack capacity	102 Ah I 119 Ah
Maximum distance per charge*	12.1 km I 13.4 km
Charge time (External)	8 hrs 15 mins I 7 hrs 30 mins
Charge time (Internal)	8 hrs 15 mins I 7 hrs 30 mins
External Charger	
Product code	Z40-00403
Input voltage	85 - 265 v
Hertz	50 - 60 Hz
Amps	15 A
Phase (single, three)	Single
IP Rating	IP30

* Based on 75% of maximum machine load weight on a flat floor on castors.

Technical Specification

Internal Charger	
Product code	Z40-00405
Input voltage	85 - 265 v
Hertz	50 - 60 Hz
Amps	15 A
Phase (single, three)	Single
IP Rating	IP30
Lithium Battery	
Product code	Z40-00304
Battery pack capacity	78 Ah
Maximum distance per charge*	9.5 km
Charge time (External charger)	2 hrs
External Charger	
Product code	Z40-00404
Input voltage	85 - 265 v
Hertz	50 - 60 Hz
Amps	40 A
Phase (single, three)	Single
IP rating	IP30
Coupling	
BoxCoupling (male I female)	Optional
L Shaped Push Plate Coupling (male)	Optional
Push Plate Coupling (male)	Optional
York Coupling (male)	Optional
Tetra Coupling (male)	Optional
Safety	
Key Switch	Standard
Emergency Stop Button	Standard
Automatic Parking Brake	Standard
Battery Discharge Indicator	Standard
Anti-Crush Button	Standard
Warning Horn	Standard
Suspension System	Standard
Options	
Additional AGM Battery	Optional
Flashing Safety Light and Motion Bleeper	Optional
Two Speed Selector Switch	Optional
Remote Control	Optional
Wheel Protectors	Optional

* Based on 75% of maximum machine load weight on a flat floor on castors.

MasterMover®

mastermover.com

© Copyright 2023

UK CA CE ISO 9001 ISO 45001