AUTHORISED MASTERMOVER DEALER, IRELAND

MasterMover MasterTow TOW1200-ES

Product brochure

Supplied, serviced and supported in Ireland by AWE Forklifts

Phone +353 1 401 9919

Email info@awe.ie

Web awe.ie/mastermover?store-page=MasterTow-TOW1200-ES-p35672205

Manufacturer brochure follows. Contact AWE for a written quote, demo or on-site visit.

MasterMover®

TOW1200 ES

Battery powered electric tow tug

TOW1200 ES

kg
12,000

Overview

The MasterTow range of powerful, easy-to-use electric tow tugs, is ideally suited to towing heavy loads. The range uses its own weight to deliver consistent traction, enabling the effortless movement of loads both inside, outside and on slopes.

Boasting intuitive operator controls and safety built-in as standard, the range provides operators with complete control when moving heavy loads. With a simple and effective coupling system, the MasterTow range guarantees load security and is perfectly suited to moving individual and multiple loads linked together.

Take advantage of innovative technology with Electric Steer (ES), available from the TOW600 ES upwards. With Electric Steer, benefit from instantaneous steering and added performance in adverse conditions. The MasterTow range is available with Remote Control, for maximum operator visibility, and Autonomous (AGV) solutions for maximum ROI, safety and efficiency.

Key Features

Safety

- Audible horn, flashing light beacon and emergency stop
- Machine crawl coupling assist for easy connection
- Multiple speed settings for complete control

Power

- Optional Battery Protection System maximises battery life
- High performance, interchangeable batteries for 24/7 operation
- Lithium batteries available

Performance

- Optimised weight distribution for guaranteed traction
- Start, move and stop movement on slopes
- Powerful performance delivers high torque even at low speeds

Connection

- Easy and universal coupling options
- Lockable couplings to keep loads secure
- Variety of coupling options available

MasterMover

Dimensions

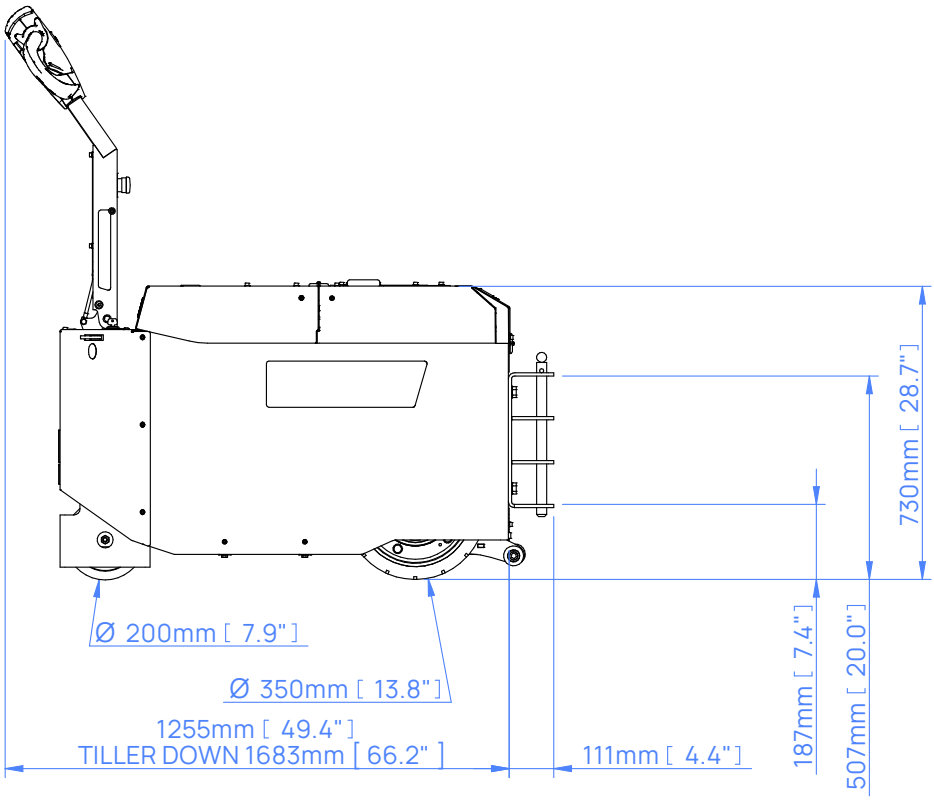
730mm [28.7"]
Ø 200mm [7.9"]
Ø 350mm [13.8"]
1255mm [49.4"]
TILLER DOWN 1683mm [66.2"]
111mm [4.4"]
187mm [7.4"]
507mm [20.0"]

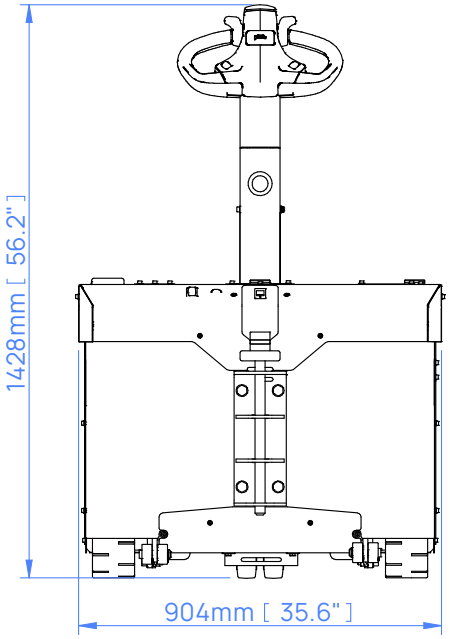
1428mm [56.2"]
904mm [35.6"]

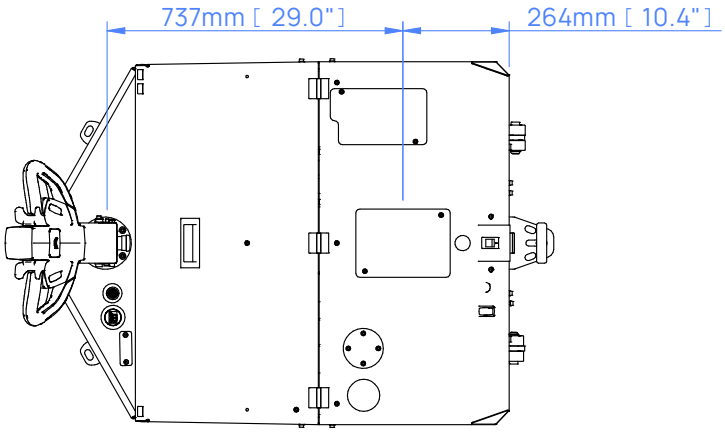
737mm [29.0"]
264mm [10.4"]

Slope Performance

The force required to move a load is based on load weight, slope angle and floor condition. Movement on a slope increases the force required to safely start, stop and move the load.

If your application involves moving a load up or down a slope, speak to our team who will be happy to advise on which machine will meet your requirements.

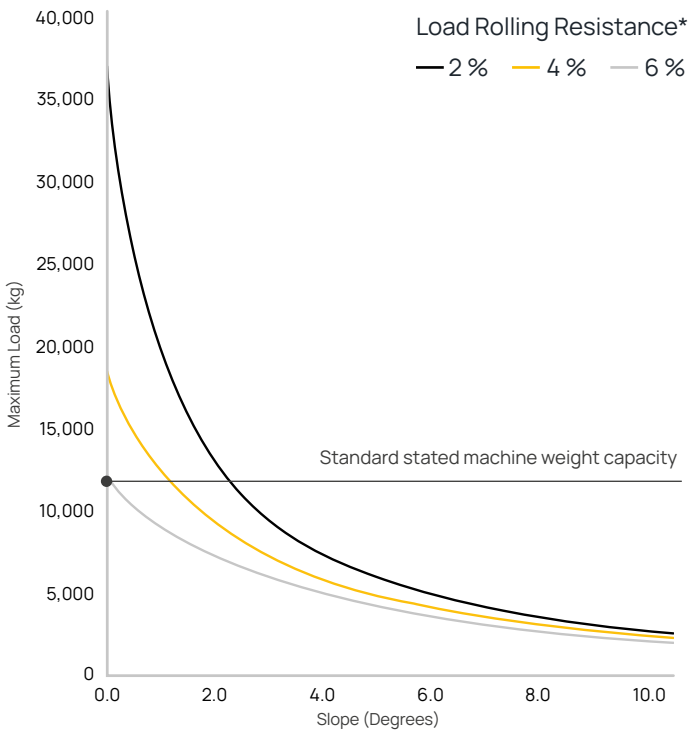

* Variables that affect rolling resistance include the quality of floor/terrain and the type/condition/quality of castor wheels.

In Application: MasterTow

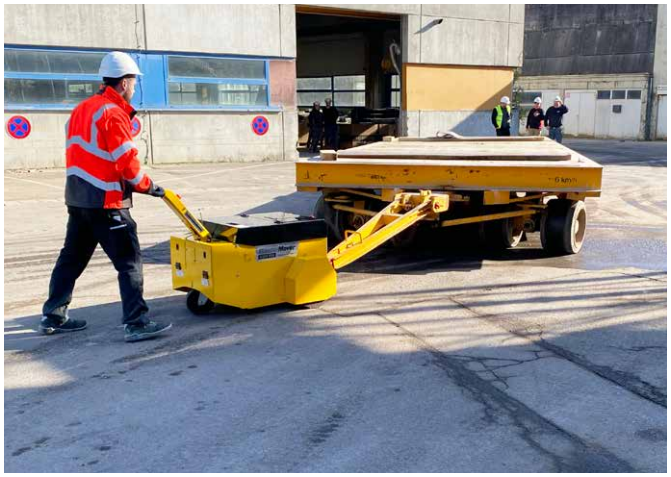

Machine Safety Features

Emergency Stop Button	Anti-Crush Button	Automatic Parking Brake
Warning Horn	**Automatic Cut Off**	**Battery Discharge Indicator**
Key Switch		

Machine Options

Additional AGM Battery **Z87-00301**	Machine Crawl Coupling Assist **Z87-00501**	Two Speed Selector Switch **Z87-00505**
Machine Crawl Coupling Assist **Z87-00501**	Fifth Wheel **Z87-00503**	Battery Protection System **Z87-00506**
		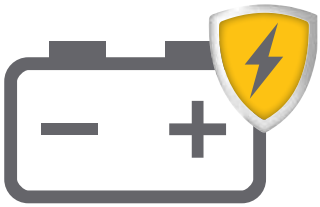

Remote Control	**Z87-00504**
	Allow your operator to take up the ideal vantage point and step away from the load itself, with remote control operation. Offering precise and controlled movement, the handset also features audible horn and emergency stop functions for added safety.
Wireless Autosteer	**Z87-00507**
	Combining the power of remote control operation and line follow navigation, Wireless AutoSteer means the electric tug follows a predefined route marked out by a line on the floor, with the operator controlling speed. A great option for tight spaces and when movement should follow the same route, every time. The machine can still be used through standard manual operation when required.
AGV Line Follow	**Z87-00508**
	Benefit from autonomous operation, and remove the need for operators to move loads. Your electric tug will autonomously travel between locations, using a line on the floor for navigation. Barcodes can additionally be used to change machine behaviours, such as to speed up, slow down or stop the machine. Scanners and safety systems identify risks and take appropriate action, restarting movement when a hazard is removed. The machine can still be used through standard manual operation when required.

Couplings

Pin Coupling
Z87-00600 male

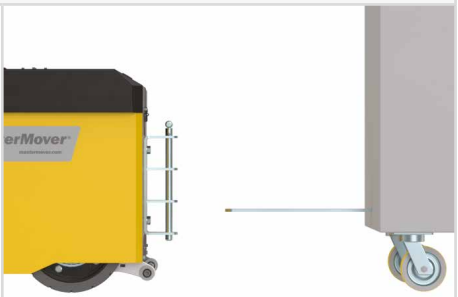

Tow Ball Coupling
Z87-00601 male

Tow Arm Coupling
Z87-00602 male

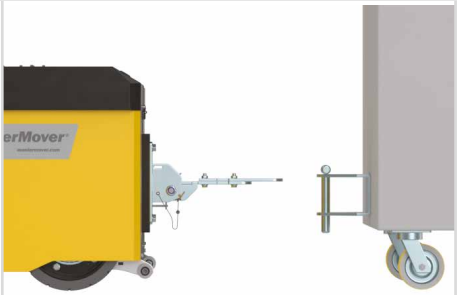

Box Coupling
Z87-00603 male I Z87-00700 female

No Coupling **Z87-00604**

Couplings

Custom Engineering

We understand that every application is different. Whether it's a custom coupling to connect to your load, modifying our electric tugs to work in a challenging environment, or designing an entirely new solution for your application, our Customer Engineering team are here to help.

For more information on our custom engineering capabilities, please visit: **mastermover.com/custom-solutions**
If you'd like to discuss your requirements, speak to your sales representative or email: **sales@mastermover.com**

Technical Specification

Machine	
Product code	Z87-00100
Maximum load (on castors I on rails)	12,000 kg I 48,000 kg
Maximum force (push I pull)	4,707 N I 7,061 N
Machine weight	965 kg
Battery weight (standard)	151 kg
Combined machine & battery weight (standard)	1,116 kg
Drive type	Electric
Braking	Regenerative
Parking brake	Electromagnetic
Drive wheel type	Solid Rubber
Castor wheel type	Non Marking Vulcanized Elastic
Drive wheel diameter	350 mm
Point loading	Drive Wheel 0.052 (kg/mm²) 0.51 [N/mm²] Castor 0.063 (kg/mm²) 0.62 [N/mm²]
Drive motor power	2 x 1.5 kW
Controller type	AC
Standard machine speed	2 KPH
Hare mode speed (With two speed selector switch)	3 KPH
Tortoise mode speed (With two speed selector switch)	1.2 KPH
Maximum slope	8°
Voltage	24 v
Noise level	Motor ≤80 dBA I Flashing light ≤85 dBA I Horn ≤112 dBA
Metal work finish	Powder coat paint & zinc plated
IP rating	IP44
AGM Battery	
Product code	Z87-00301
Battery pack capacity	204 Ah
Maximum distance per charge*	8.6 km
Charge time (External I Internal charger)	7 hrs 30 mins I 10 hrs 30 mins
External Charger	
Product code	Z87-00400
Input voltage	85 - 265 v
Hertz	50 - 60 Hz
Amps	30 A
Phase (single, three)	Single
IP Rating	IP30
Internal Charging	
Product code	Z87-00401

* Based on 75% of maximum machine load weight on a flat floor on castors.

Technical Specification

Input voltage	85 - 265 v
Hertz	50 - 60 Hz
Amps	20 A
Phase (single, three)	Single
IP rating	IP30
Lithium Battery	
Product code	Z87-00302
Battery pack capacity	120 Ah
Maximum distance per charge*	5 km
Charge time (External charger)	3 hrs
External Charging	
Product code	Z87-00402
Input voltage	85 - 265 v
Hertz	50 - 60 Hz
Amps	40 A
Phase (single, three)	Single
IP rating	IP30
Coupling	
Pin Coupling (male)	Optional
Tow Ball Coupling (male)	Optional
Tow Arm Coupling (male)	Optional
Box Coupling (male I female)	Optional
No Coupling	Optional
Safety	
Key Switch	Standard
Emergency Stop	Standard
Battery Discharge Indicator	Standard
Anti-Crush Button	Standard
Warning Horn	Standard
Automatic Cut Off (as tiller arm returns to vertical)	Standard
Automatic Parking Brake	Standard
Integrated Lift Points	Standard
Integrated Tie-Down Points	Standard
Options	
Additional AGM Battery	Optional
Flashing Safety Light and Motion Bleeper	Optional
Machine Crawl Coupling Assist	Optional
Fifth Wheel	Optional

* Based on 75% of maximum machine load weight on a flat floor on castors.

Technical Specification

Two Speed Selector Switch	Optional
Battery Protection System	Optional
Remote Control	Optional
Wireless Autosteer	Optional
AGV Line Follow	Optional

MasterMover®

mastermover.com

© Copyright 2023

UK CA CE ISO 9001 ISO 45001