AUTHORISED MASTERMOVER DEALER, IRELAND

MasterMover MasterTow TOW600

Product brochure

Supplied, serviced and supported in Ireland by AWE Forklifts

Phone +353 1 401 9919

Email info@awe.ie

Web awe.ie/mastermover?store-page=MasterTow-TOW600-p35672202

Manufacturer brochure follows. Contact AWE for a written quote, demo or on-site visit.

MasterMover®

TOW600

Battery powered electric tow tug

TOW600

kg
6,000

Overview

The MasterTow range of powerful, easy-to-use electric tow tugs, is ideally suited to towing heavy loads. The range uses its own weight to deliver consistent traction, enabling the effortless movement of loads both inside, outside and on slopes.

Boasting intuitive operator controls and safety built-in as standard, the range provides operators with complete control when moving heavy loads. With a simple and effective coupling system, the MasterTow range guarantees load security and is perfectly suited to moving individual and multiple loads linked together.

Take advantage of innovative technology with Electric Steer (ES), available from the TOW600 ES upwards. With Electric Steer, benefit from instantaneous steering and added performance in adverse conditions. The MasterTow range is available with Remote Control, for maximum operator visibility, and Autonomous (AGV) solutions for maximum ROI, safety and efficiency.

Key Features

Safety

- Audible horn, flashing light beacon and emergency stop
- Machine crawl coupling assist for easy connection
- Multiple speed settings for complete control

Performance

- Optimised weight distribution for guaranteed traction
- Start, move and stop movement on slopes
- Powerful performance delivers high torque even at low speeds

Power

- Optional Battery Protection System maximises battery life
- High performance, interchangeable batteries for 24/7 operation
- Lithium batteries available

Connection

- Easy and universal coupling options
- Lockable couplings to keep loads secure
- Variety of coupling options available

Dimensions

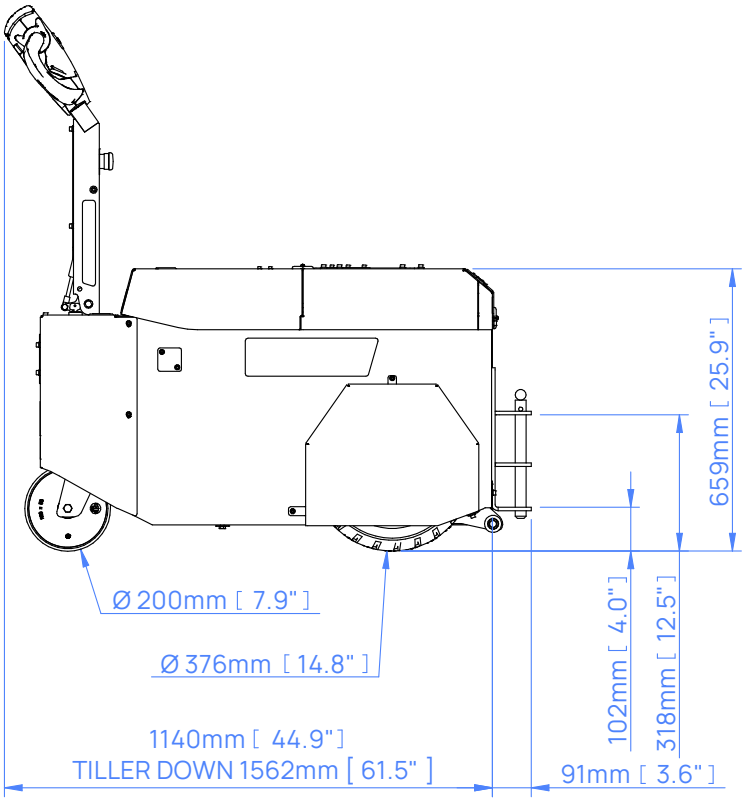
659mm [25.9"]
Ø 200mm [7.9"]
Ø 376mm [14.8"]
102mm [4.0"]
318mm [12.5"]
1140mm [44.9"]
TILLER DOWN 1562mm [61.5"]
91mm [3.6"]

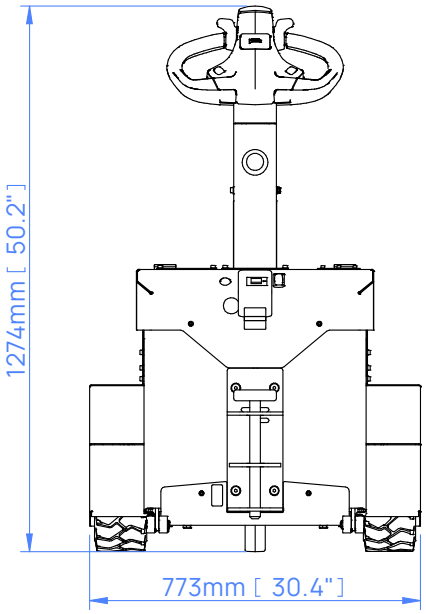
1274mm [50.2"]
773mm [30.4"]

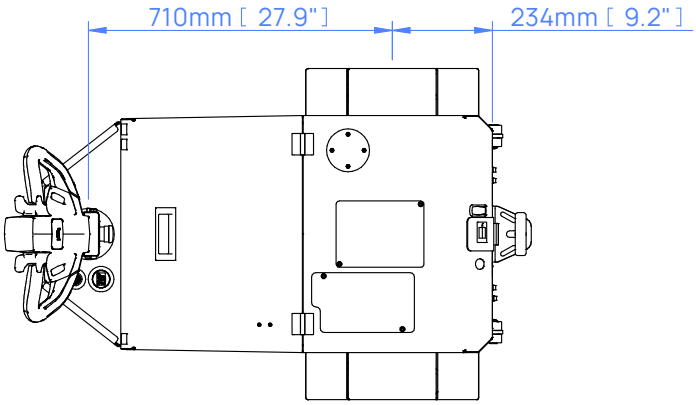
710mm [27.9"]
234mm [9.2"]

Slope Performance

The force required to move a load is based on load weight, slope angle and floor condition. Movement on a slope increases the force required to safely start, stop and move the load.

If your application involves moving a load up or down a slope, speak to our team who will be happy to advise on which machine will meet your requirements.

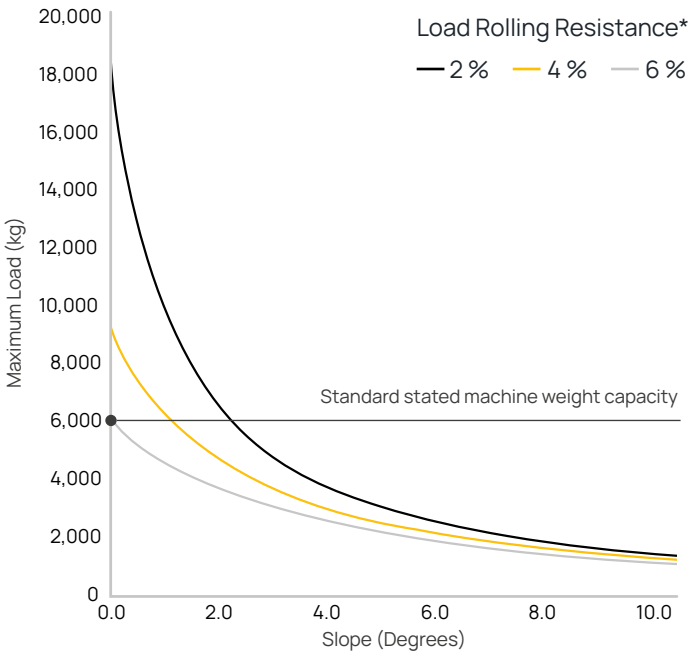

* Variables that affect rolling resistance include the quality of floor/terrain and the type/condition/quality of castor wheels.

In Application: MasterTow

Machine Safety Features

Emergency Stop Button	Anti-Crush Button	Automatic Parking Brake
Warning Horn	**Automatic Cut Off**	**Battery Discharge Indicator**
Automatic Cut Off		

Machine Options

AGM Battery **Z49-00300**	Flashing Light & Motion Beeper **Z83-00500**	Two Speed Selector Switch **Z83-00505**
Machine Crawl Coupling Assist **Z83-00501**	Tiller Steering **Z83-00509**	Fifth Wheel **Z83-00503**
	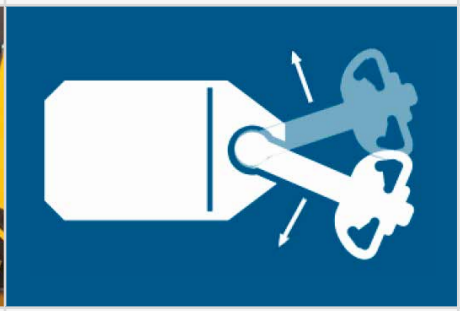	
Remote Control† **Z84-00504**	Battery Protection System **Z83-00506**	

† Only available on the TOW600 ES

Couplings

Pin Coupling
Z83-00600 male

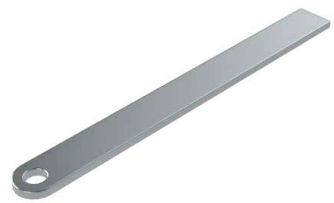
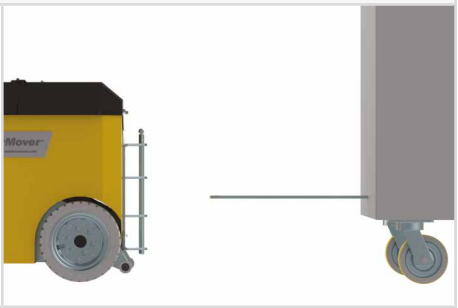

Tow Ball Coupling
Z83-00601 male

Tow Arm Coupling
Z83-00602 male

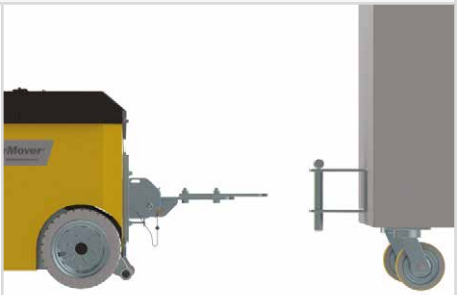

Box Coupling
Z83-00603 male I Z83-00700 female

No Coupling **Z83-00604**

Couplings

Custom Engineering

We understand that every application is different. Whether it's a custom coupling to connect to your load, modifying our electric tugs to work in a challenging environment, or designing an entirely new solution for your application, our Customer Engineering team are here to help.

For more information on our custom engineering capabilities, please visit: **mastermover.com/custom-solutions**
If you'd like to discuss your requirements, speak to your sales representative or email: **sales@mastermover.com**

Technical Specification

Machine	
Product code	Z83-00100
Maximum load (on castors I on rails)	6,000 kg I 24,000 kg
Maximum force (push I pull)	2,354 N I 3,530 N
Machine weight	505 kg
Battery weight (standard) (102 Ah I 119 Ah)	102 kg I 106 kg
Combined machine & battery weight (standard) (102 Ah I 119 Ah)	607 kg I 611 kg
Drive type	Electric
Braking	Regenerative
Parking brake	Electromagnetic
Drive wheel type	Solid Rubber
Castor wheel type	Polyurethane
Drive wheel diameter	375 mm
Drive motor power	1.7 kW
Controller type	AC
Standard machine speed	2 KPH
Hare mode speed (With two speed selector switch)	3 KPH
Tortoise mode speed (With two speed selector switch)	1.2 KPH
Maximum slope	10°
Voltage	24 v
Noise level	Motor ≤80 dBA I Flashing light ≤85 dBA I Horn ≤112 dBA
Metal work finish	Powder coat paint & zinc plated
IP rating	IP44
AGM Battery	
Product codes	Z83-00300 I Z83-00301
Battery pack capacity	102 Ah I 119 Ah
Maximum distance per charge*	8.5 km I 9.9 km
External charge time 15 A I 20 A	7 hrs 30 mins I 5 hrs 45 mins
Internal charge time 15 A I 20 A	8 hrs 30 mins I 6 hrs 30 mins
External Charger	
Product code	Z83-00400 I Z83-00402
Input voltage	85 - 265 v
Hertz	50 - 60 Hz
Amps	15 A I 20 A
Phase (single, three)	Single
IP Rating	IP30
Internal Charging	
Product code	Z83-00401 I Z83-00403
Input voltage	85 - 265 v
Hertz	50 - 60 Hz

* Based on 75% of maximum machine load weight on a flat floor on castors.

Technical Specification

Amps	15 A I 20 A
Phase (single, three)	Single
IP rating	IP30
Lithium Battery	
Product code	Z83-00302
Battery pack capacity	60 Ah
Maximum distance per charge*	8 km
Charge time (External charger)	1 hrs 30 mins
External Charging	
Product code	Z83-00404
Input voltage	85 - 265 v
Hertz	50 - 60 Hz
Amps	15 A I 20 A
Phase (single, three)	Single
IP rating	IP30
Coupling	
Pin Coupling (male)	Optional
Tow Ball Coupling (male)	Optional
Tow Arm Coupling (male)	Optional
Box Coupling (male I female)	Optional
No Coupling	Optional
Safety	
Key Switch	Standard
Emergency Stop	Standard
Battery Discharge Indicator	Standard
Anti-Crush Button	Standard
Warning Horn	Standard
Automatic Cut Off (as tiller arm returns to vertical)	Standard
Automatic Parking Brake	Standard
Integrated Lift Points I Tie-Down Point	Standard
Options	
Additional AGM Battery	Optional
Flashing Safety Light and Motion Bleeper	Optional
Machine Crawl Coupling Assist	Optional
Fifth Wheel	Optional
Two Speed Selector Switch	Optional
Battery Protection System	Optional
Remote Control†	Optional
Tiller Steering	Optional

† Only available on the TOW600 ES

* Based on 75% of maximum machine load weight on a flat floor on castors.

MasterMover®

mastermover.com

© Copyright 2023

UK CA CE ISO 9001 ISO 45001