AUTHORISED MASTERMOVER DEALER, IRELAND

# MasterMover MasterTug MT20-1200+ SS

Product brochure

**Supplied, serviced and supported in Ireland by AWE Forklifts**

Phone +353 1 401 9919

Email info@awe.ie

Web awe.ie/mastermover?store-page=StainlessSteel-MT20-1200-Plus-SS-p35672508

Manufacturer brochure follows. Contact AWE for a written quote, demo or on-site visit.

MasterMover®

# MT20/1200+ SS

Battery powered electric tug

# MT20/1200+ SS

kg
12,000

## Overview

The Stainless Steel range of electric tugs delivers the same level of performance as our mild steel ranges, but with the added benefit of seamlessly integrating into sterile environments.

Whether it's a biopharmaceutical cleanroom suite or a food manufacturing facility, our stainless steel electric tugs remove manual handling and drive operational efficiency without compromising the cleanliness of your facility.

Constructed from high-grade 316 stainless steel and with IP ratings of up to IP55 available, stainless steel electric tugs are ideally suited to the stringent requirements of sterile environments.

The Stainless Steel range of electric tow tugs facilitate the controlled movement of loads in tight spaces, with an array of coupling options available that put load security and safety at the forefront.

## Key Features

### Safety

- Audible horn, flashing safety light, emergency stop button and anti-crush button
- Speed control with an optional two-speed selector switch for maximum control
- Complete load security with automatic braking

### Power

- Optimised motor output to optimise speed and power
- Maintenance-free, interchangeable battery options
- Powerful, effective, traction generation for smooth performance

### Performance

- Powerful weight-moving capabilities suited to every application
- Maximum traction even on wet floors
- Compact and manoeuvrable to deliver precise movements in even the tightest of spaces

### Connection

- Secure coupling systems to deliver the controlled movement of loads
- A range of coupling options available to connect to a variety of loads
- Custom couplings available

MasterMover

# Dimensions

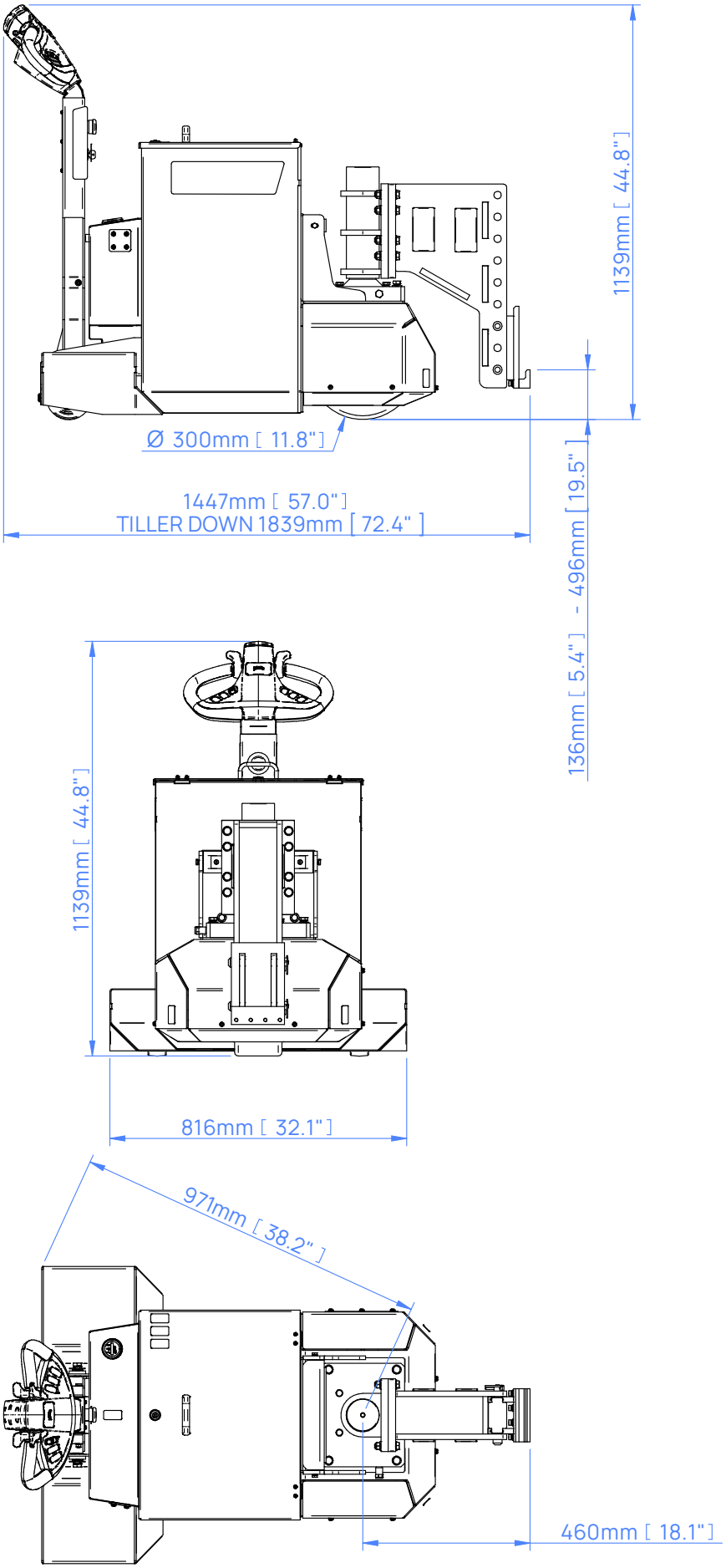
1139mm [ 44.8" ]
Ø 300mm [ 11.8" ]
1447mm [ 57.0" ]
TILLER DOWN 1839mm [ 72.4" ]
136mm [ 5.4" ] - 496mm [ 19.5" ]
1139mm [ 44.8" ]
816mm [ 32.1" ]
971mm [ 38.2" ]
460mm [ 18.1" ]

# Slope Performance

The force required to move a load is based on load weight, slope angle and floor condition. Movement on a slope increases the force required to safely start, stop and move the load.

If your application involves moving a load up or down a slope, speak to our team who will be happy to advise on which machine will meet your requirements.

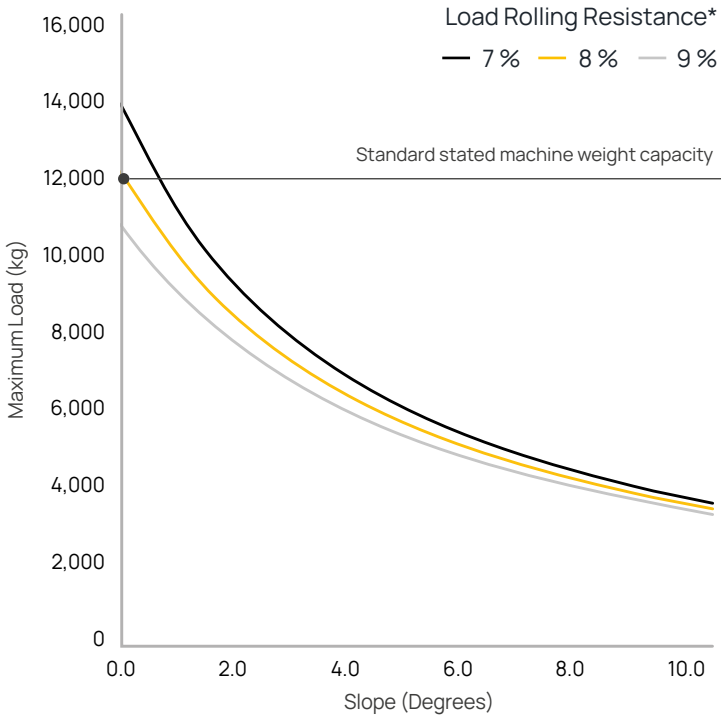


* Variables that affect rolling resistance include the quality of floor/terrain and the type/condition/quality of castor wheels.

# In Application: MasterTug Stainless Steel

# Standard Safety Features

| Emergency Stop Button | Anti-Crush Button | Warning Horn |
|---|---|---|
| | | |
| **Automatic Parking Brake** | **Automatic Cut Off** | **Battery Discharge Indicator** |
| | 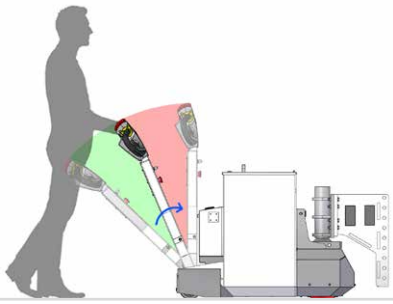 | |
| **Key Switch** | | |
| | | |

# Machine Options

| | | |
|---|---|---|
| Additional Battery<br>**Z73-00300** | Flashing Light & Motion Beeper<br>**Z73-00500** | Two Speed Selector Switch<br>**Z73-00502** |
| 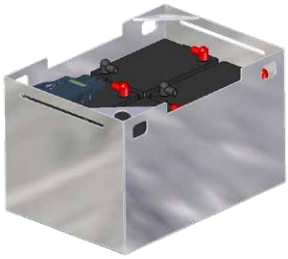 | | |
| Drive Wheel - 316 Stainless Steel<br>**Z73-00503** | Drive Wheel - 316 Stainless Steel Extra Grip<br>**Z73-00504** | Drive Wheel - Extra Grip<br>**Z73-00505** |
| | | |

# Couplings

CombiCoupling
**Z73-00600 male I Z73-00700 female**

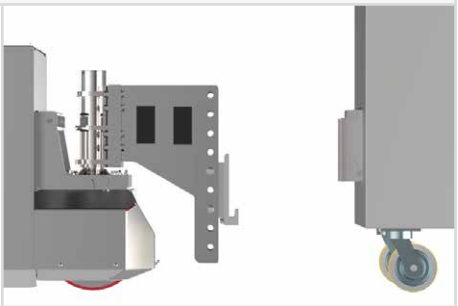

BoxCoupling
**Z73-00601 male I Z73-00701 female**

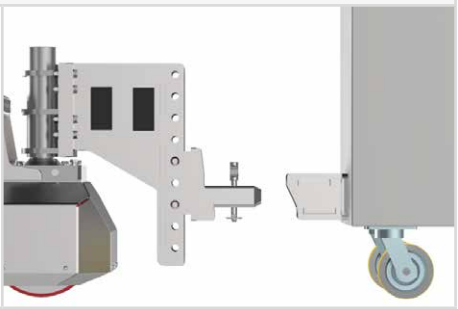

## Custom Engineering

We understand that every application is different. Whether it's a custom coupling to connect to your load, modifying our electric tugs to work in a challenging environment, or designing an entirely new solution for your application, our Customer Engineering team are here to help.

For more information on our custom engineering capabilities, please visit: **mastermover.com/custom-solutions**
If you'd like to discuss your requirements, speak to your sales representative or email: **sales@mastermover.com**

# Technical Specification

| Machine | |
|---|---|
| Product code | Z73-00106 |
| Maximum load (on castors I on rails) | 12,000 kg I 48,000 kg |
| Maximum force (push I pull) | 9,414 N I 9,414 N |
| Machine weight | 320 kg |
| Battery weight (standard) | 140 kg |
| Combined machine & battery weight (standard) | 460 kg |
| Drive type | Electric |
| Braking | Regenerative |
| Parking brake | Electromagnetic |
| Drive wheel type | Non-Marking Polyurethane |
| Castor wheel type | Impact Resistant Nylon |
| Drive wheel diameter | 300 mm |
| Point loading | 0.52 (kg/mm²) 5.13 [N/mm²] |
| Drive motor power | 2 kW |
| Controller type | AC |
| Standard machine speed (Without two speed selector switch) | 2 KPH |
| Hare mode speed (With two speed selector switch) | 3 KPH |
| Tortoise mode speed (With two speed selector switch) | 1.2 KPH |
| Maximum slope | 7° |
| Voltage | 24 v |
| Noise level | Motor ≤80 dBA I Flashing light ≤85 dBA I Horn ≤112 dBA |
| Metal work finish | Stainless Steel 316 grade I 180-grit abrasive to 0.76µ satin finish |
| IP rating | IP44 |
| **Hydraulic Specification** | |
| Maximum Lift Force at the Coupling | 1,843 kg |
| **Sealed Lead Acid Battery** | |
| Product code | Z73-00300 |
| Battery pack capacity | 179 Ah |
| Maximum distance per charge* | 8 km |
| Charge time (External charger) | 6 hrs |
| **External Charger** | |
| Product code | Z73-00400 |
| Input voltage | 85 - 265 v |
| Hertz | 50 - 60 Hz |
| Amps | 30 A |
| Phase (single, three) | Single |
| IP Rating | IP30 |



* Based on 75% of maximum machine load weight on a flat floor on castors.

# Technical Specification

| | |
|---|---|
| **Lithium Battery** | |
| Product code | Z73-00302 |
| Battery pack capacity | 158 Ah |
| Maximum distance per charge* | 7.2 km |
| Charge time | 4 hrs |
| **Charging** | |
| Product code | Z73-00401 |
| Input voltage | 85 - 265 v |
| Hertz | 50 - 60 Hz |
| Amps | 40 A |
| Phase (single, three) | Single |
| IP rating | IP30 |
| **Coupling** | |
| CombiCoupling (male I female) | Optional |
| BoxCoupling (male I female) | Optional |
| **Safety** | |
| Key Switch | Standard |
| Emergency Stop | Standard |
| Battery Discharge Indicator | Standard |
| Anti-Crush Button | Standard |
| Warning Horn | Standard |
| Automatic Cut Off (as tiller arm returns to vertical) | Standard |
| Automatic Parking Brake | Standard |
| **Options** | |
| Additional Battery | Optional |
| Flashing Safety Light and Motion Bleeper | Optional |
| Two Speed Selector Switch | Optional |
| Drive Wheel - 316 Stainless Steel | Optional |
| Drive Wheel - 316 Stainless Steel Extra Grip | Optional |
| Drive Wheel Extra Grip | Optional |



* Based on 75% of maximum machine load weight on a flat floor on castors.

MasterMover®

mastermover.com

© Copyright 2023

UK CA CE ISO 9001 ISO 45001