AUTHORISED MASTERMOVER DEALER, IRELAND

MasterMover MasterTug MT20-800+ SS

Product brochure

Supplied, serviced and supported in Ireland by AWE Forklifts

Phone +353 1 401 9919

Email info@awe.ie

Web awe.ie/mastermover?store-page=StainlessSteel-MT20-800-Plus-SS-p35672506

Manufacturer brochure follows. Contact AWE for a written quote, demo or on-site visit.

MasterMover®

MT20/800+ SS

Battery powered electric tug

MT20/800+ SS

kg
8,000

Overview

The Stainless Steel range of electric tugs delivers the same level of performance as our mild steel ranges, but with the added benefit of seamlessly integrating into sterile environments.

Whether it's a biopharmaceutical cleanroom suite or a food manufacturing facility, our stainless steel electric tugs remove manual handling and drive operational efficiency without compromising the cleanliness of your facility.

Constructed from high-grade 316 stainless steel and with IP ratings of up to IP55 available, stainless steel electric tugs are ideally suited to the stringent requirements of sterile environments.

The Stainless Steel range of electric tow tugs facilitate the controlled movement of loads in tight spaces, with an array of coupling options available that put load security and safety at the forefront.

Key Features

Safety

- Audible horn, flashing safety light, emergency stop button and anti-crush button
- Speed control with an optional two-speed selector switch for maximum control
- Complete load security with automatic braking

Power

- Optimised motor output to optimise speed and power
- Maintenance-free, interchangeable battery options
- Powerful, effective, traction generation for smooth performance

Performance

- Powerful weight-moving capabilities suited to every application
- Maximum traction even on wet floors
- Compact and manoeuvrable to deliver precise movements in even the tightest of spaces

Connection

- Secure coupling systems to deliver the controlled movement of loads
- A range of coupling options available to connect to a variety of loads
- Custom couplings available

MasterMover

Dimensions

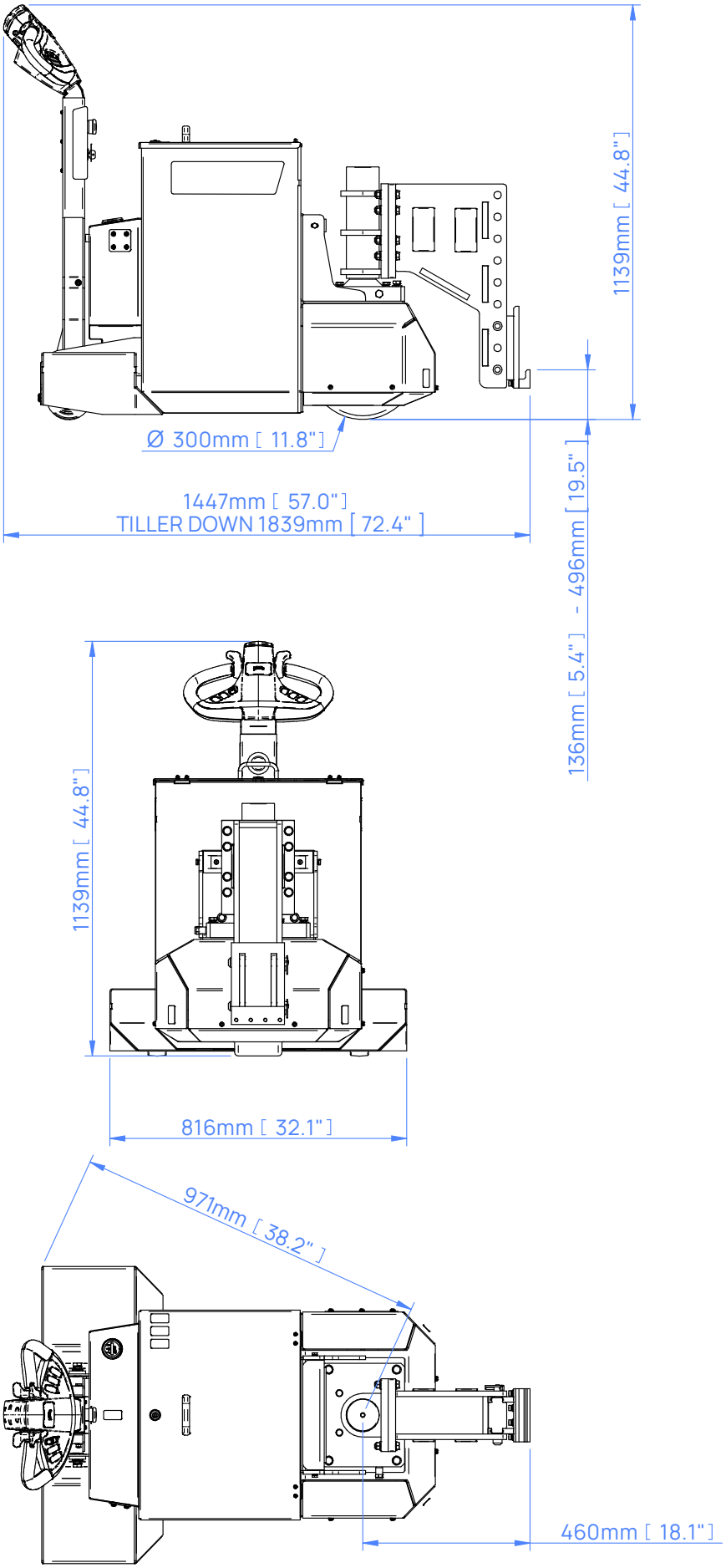
1139mm [44.8"]
Ø 300mm [11.8"]
1447mm [57.0"]
TILLER DOWN 1839mm [72.4"]
136mm [5.4"] - 496mm [19.5"]
1139mm [44.8"]
816mm [32.1"]
971mm [38.2"]
460mm [18.1"]

Slope Performance

The force required to move a load is based on load weight, slope angle and floor condition. Movement on a slope increases the force required to safely start, stop and move the load.

If your application involves moving a load up or down a slope, speak to our team who will be happy to advise on which machine will meet your requirements.

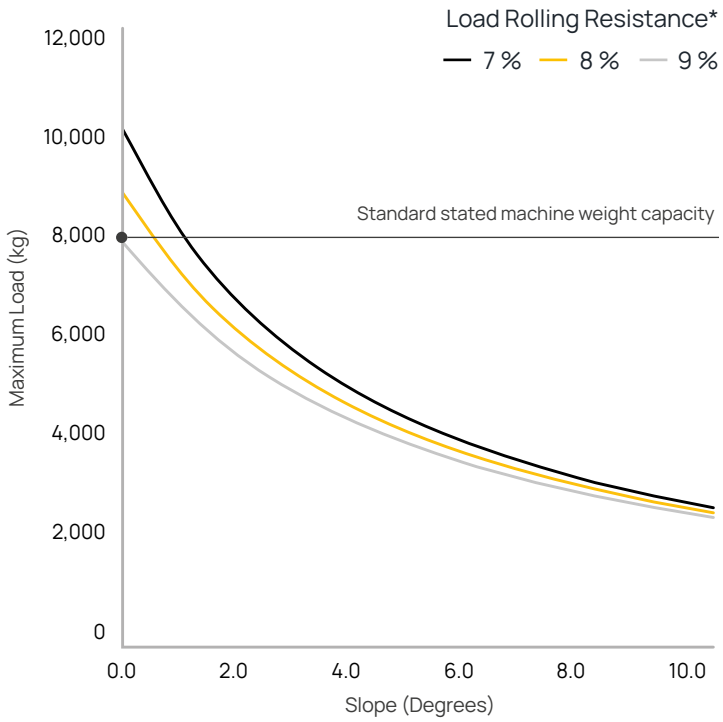

* Variables that affect rolling resistance include the quality of floor/terrain and the type/condition/quality of castor wheels.

In Application: MasterTug Stainless Steel

Standard Safety Features

Emergency Stop Button	Anti-Crush Button	Warning Horn
Automatic Parking Brake	**Automatic Cut Off**	**Battery Discharge Indicator**
	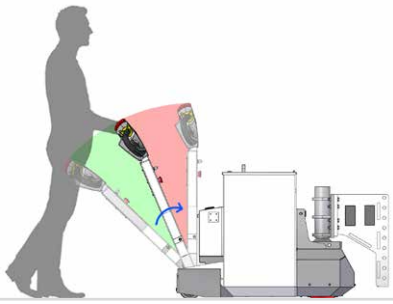	
Key Switch		

Machine Options

Additional Battery **Z73-00300**	Flashing Light & Motion Beeper **Z73-00500**	Two Speed Selector Switch **Z73-00502**
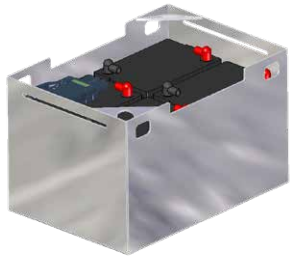		
Drive Wheel - 316 Stainless Steel **Z73-00503**	Drive Wheel - 316 Stainless Steel Extra Grip **Z73-00504**	Drive Wheel - Extra Grip **Z73-00505**

Couplings

CombiCoupling
Z73-00600 male I Z73-00700 female

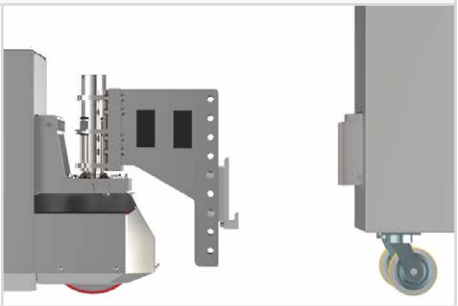

BoxCoupling
Z73-00601 male I Z73-00701 female

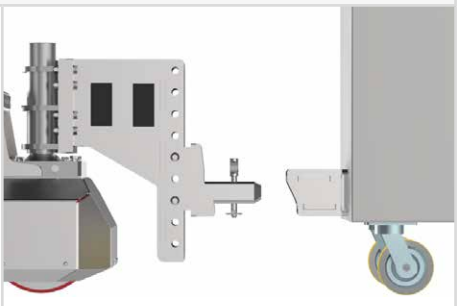

Custom Engineering

We understand that every application is different. Whether it's a custom coupling to connect to your load, modifying our electric tugs to work in a challenging environment, or designing an entirely new solution for your application, our Customer Engineering team are here to help.

For more information on our custom engineering capabilities, please visit: **mastermover.com/custom-solutions**
If you'd like to discuss your requirements, speak to your sales representative or email: **sales@mastermover.com**

Technical Specification

Machine	
Product code	Z73-00104
Maximum load (on castors I on rails)	8,000 kg I 32,000 kg
Maximum force (push I pull)	6,768 N I 6,768 N
Machine weight	320 kg
Battery weight (standard)	140 kg
Combined machine & battery weight (standard)	460 kg
Drive type	Electric
Braking	Regenerative
Parking brake	Electromagnetic
Drive wheel type	Non-Marking Polyurethane
Castor wheel type	Impact Resistant Nylon
Drive wheel diameter	300 mm
Point loading	0.52 (kg/mm²) 5.13 [N/mm²]
Drive motor power	2 kW
Controller type	AC
Standard machine speed (Without two speed selector switch)	2 KPH
Hare mode speed (With two speed selector switch)	3 KPH
Tortoise mode speed (With two speed selector switch)	1.2 KPH
Maximum slope	7°
Voltage	24 v
Noise level	Motor ≤80 dBA I Flashing light ≤85 dBA I Horn ≤112 dBA
Metal work finish	Stainless Steel 316 grade I 180-grit abrasive to 0.76µ satin finish
IP rating	IP44
Hydraulic Specification	
Maximum Lift Force at the Coupling	1,843 kg
Sealed Lead Acid Battery	
Product code	Z73-00300
Battery pack capacity	179 Ah
Maximum distance per charge*	11.7 km
Charge time (External charger)	6 hrs
External Charger	
Product code	Z73-00400
Input voltage	85 - 265 v
Hertz	50 - 60 Hz
Amps	30 A
Phase (single, three)	Single
IP Rating	IP30

* Based on 75% of maximum machine load weight on a flat floor on castors.

Technical Specification

Lithium Battery	
Product code	Z73-00302
Battery pack capacity	158 Ah
Maximum distance per charge*	10.5 km
Charge time	4 hrs
Charging	
Product code	Z73-00401
Input voltage	85 - 265 v
Hertz	50 - 60 Hz
Amps	40 A
Phase (single, three)	Single
IP rating	IP30
Coupling	
CombiCoupling (male I female)	Optional
BoxCoupling (male I female)	Optional
Safety	
Key Switch	Standard
Emergency Stop	Standard
Battery Discharge Indicator	Standard
Anti-Crush Button	Standard
Warning Horn	Standard
Automatic Cut Off (as tiller arm returns to vertical)	Standard
Automatic Parking Brake	Standard
Options	
Additional Battery	Optional
Flashing Safety Light and Motion Bleeper	Optional
Two Speed Selector Switch	Optional
Drive Wheel - 316 Stainless Steel	Optional
Drive Wheel - 316 Stainless Steel Extra Grip	Optional
Drive Wheel Extra Grip	Optional

* Based on 75% of maximum machine load weight on a flat floor on castors.

MasterMover®

mastermover.com

© Copyright 2023

UK CA CE ISO 9001 ISO 45001