AUTHORISED MASTERMOVER DEALER, IRELAND

MasterMover MasterTug MT200

Product brochure

Supplied, serviced and supported in Ireland by AWE Forklifts

Phone +353 1 401 9919

Email info@awe.ie

Web awe.ie/mastermover?store-page=MasterTug-MT200-p35672100

Manufacturer brochure follows. Contact AWE for a written quote, demo or on-site visit.

MasterMover®

MT200

Battery powered electric tug

MT200

kg
2,000

Overview

The MT200 delivers unrivalled manoeuvrability when moving heavy-wheeled loads weighing up to 2,000kg. Using its own weight to deliver consistent traction, the MT200 enables the effortless movement of loads both inside, outside and on slopes.

With ergonomic controls, lightweight steering and an intuitive design, MasterTug takes the strain and empowers an operator to move heavy loads with complete control. A secure coupling system maximises load security and performance, guaranteeing total peace of mind.

Key Features

Safety

- Audible horn, flashing safety light, emergency stop button and anti-crush button
- Speed control with an optional two-speed selector switch for maximum control
- Complete load security

Power

- Optimised motor output to optimise speed and power
- Maintenance-free, interchangeable battery options
- Powerful, effective, traction generation for smooth performance

Performance

- Powerful weight-moving capabilities
- Start, move and stop movement on slopes
- Compact machine design, perfect for tight spaces

Connection

- Secure coupling systems delivers controlled movement of loads
- BoxCoupling maximises load security, even on rough, uneven floors

MasterMover

Dimensions

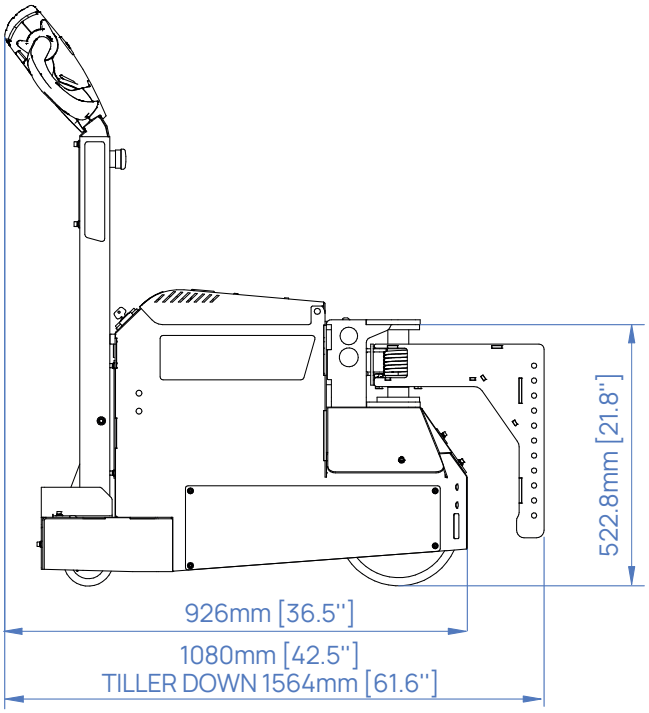
522.8mm [21.8"]
926mm [36.5"]
1080mm [42.5"]
TILLER DOWN 1564mm [61.6"]

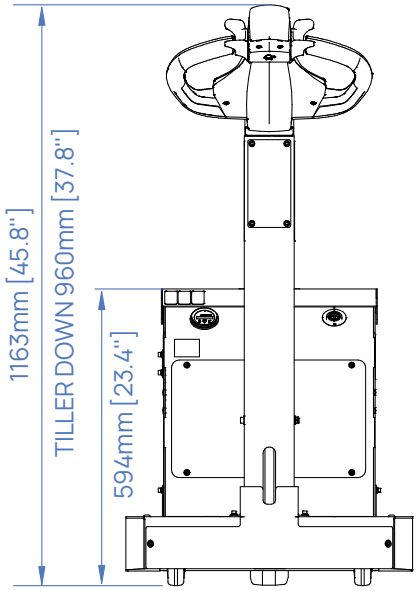
1163mm [45.8"]
TILLER DOWN 960mm [37.8"]
594mm [23.4"]

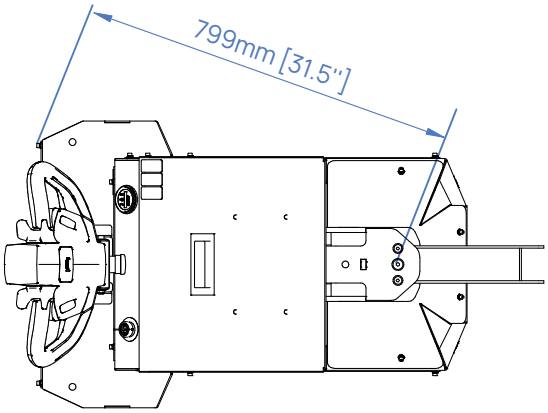
799mm [31.5"]

Slope Performance

The force required to move a load is based on load weight, slope angle and floor condition. Movement on a slope increases the force required to safely start, stop and move the load.

If your application involves moving a load up or down a slope, speak to our team who will be happy to advise on which machine will meet your requirements.

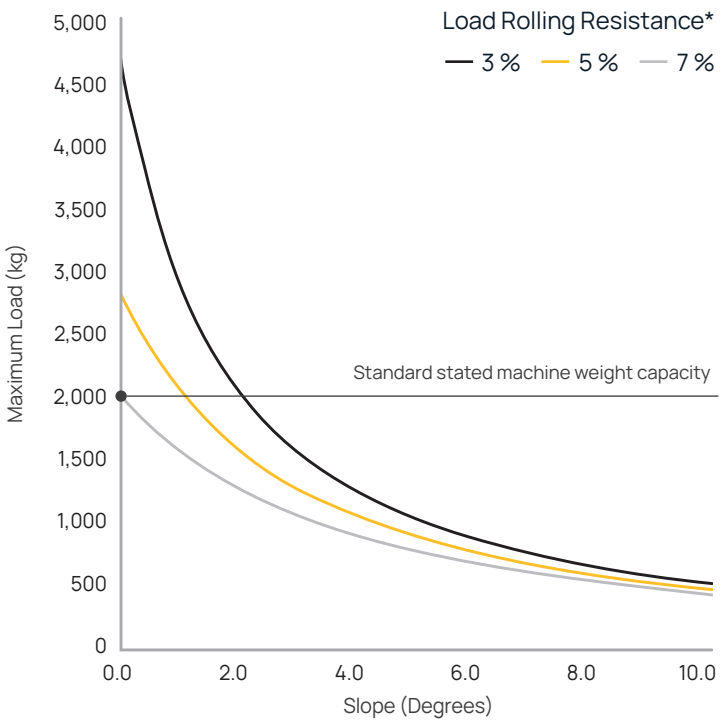

* Variables that affect rolling resistance include the quality of floor/terrain and the type/condition/quality of castor wheels.

In Application: MasterTug

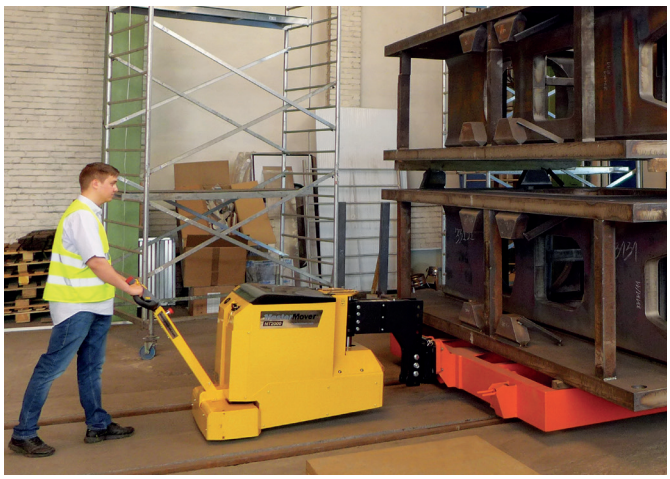

Standard Safety Features

Emergency Stop Button	Anti-Crush Button	Automatic Parking Brake
Warning Horn	**Automatic Cut Off**	**Battery Discharge Indicator**
	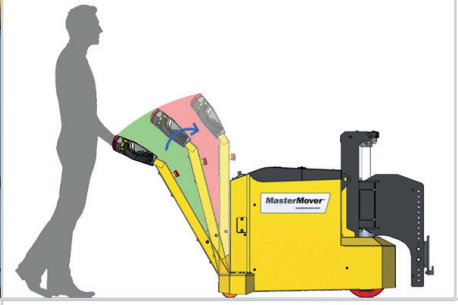	
Key Switch		

Machine Options

Additional AGM Battery **Z50-00301**	Flashing Light & Motion Beeper **Z50-00500**	Two Speed Selector Switch **Z50-00502**
Battery Protection System **Z50-00504**	Lift and Tie Down Points **Z50-00505**	

Couplings

BoxCoupling

Z50-00602 male I Z50-00700 female

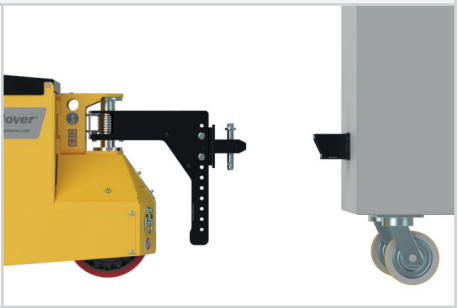

Custom Engineering

We understand that every application is different. Whether it's a custom coupling to connect to your load, modifying our electric tugs to work in a challenging environment, or designing an entirely new solution for your application, our Customer Engineering team are here to help.

For more information on our custom engineering capabilities, please visit: **mastermover.com/custom-solutions**
If you'd like to discuss your requirements, speak to your sales representative or email: **sales@mastermover.com**

Technical Specification

Machine	
Product code	Z50-00104
Maximum load (on castors I on rails)	2,000 kg I 8,000 kg
Maximum (push force I pull force)	1,373 N I 1,373 N
Machine weight	179 kg
Battery weight (standard)	43 kg
Combined machine & battery weight (standard)	222 kg
Drive type	Electric
Braking	Regenerative
Parking brake	Electromagnetic
Drive wheel type	Non-Marking Polyurethane
Castor wheel type	Non-Marking Polyurethane
Drive wheel diameter	245 mm
Drive motor power	1.2 kW
Controller type	AC
Standard machine speed (no speed selector switch)	2 KPH
Hare mode speed (With two speed selector switch)	3 KPH
Tortoise mode speed (With two speed selector switch)	1.2 KPH
Maximum slope	8°
Voltage	24 v
Noise level	Motor ≤80 dBA I Flashing light ≤85 dBA I Horn ≤112 dBA
Metal work finish	Powder coat paint & zinc plated
IP rating	IP44
AGM Battery	
Product code	Z50-00301
Battery pack capacity	46 Ah
Maximum distance per charge*	10.6 km
Charge time (External charger)	3 hrs 45 mins
Charge time (Internal charger)	3 hrs 45 mins
External Charger	
Product code	Z50-00405
Input voltage	85 - 265 v
Hertz	50 - 60 Hz
Amps	10 A
Phase (single, three)	Single
IP Rating	IP30

* Based on 75% of maximum machine load weight on a flat floor on castors.

Technical Specification

Internal Charging	
Product code	Z50-00402
Input voltage	85 - 265 v
Hertz	50 - 60 Hz
Amps	10 Ah
Phase (single, three)	Single
IP rating	IP30
Lithium Battery	
Product code	Z50-00304
Battery pack capacity	78 Ah
Maximum distance per charge*	19 km
Charge time (External charger)	2 hrs
External Charging	
Product code	Z50-00403
Input voltage	85 - 265 v
Hertz	50 - 60 Hz
Amps	40 A
Phase (single, three)	Single
IP rating	IP30
Coupling	
BoxCoupling (male I female)	Optional
Safety	
Key Switch	Standard
Emergency Stop	Standard
Battery Discharge Indicator	Standard
Anti-Crush Button	Standard
Warning Horn	Standard
Automatic Cut Off (as tiller arm returns to vertical)	Standard
Automatic Parking Brake	Standard
Options	
Additional AGM Battery	Optional
Flashing Safety Light and Motion Bleeper	Optional
Two Speed Selector Switch	Optional
Battery Protection System	Optional
Lift Points	Optional
Tie-Down Points	Optional

* Based on 75% of maximum machine load weight on a flat floor on castors.

MasterMover®

mastermover.com

© Copyright 2023

UK CA CE ISO 9001 ISO 45001