AUTHORISED MASTERMOVER DEALER, IRELAND

MasterMover MasterTug MT600+

Product brochure

Supplied, serviced and supported in Ireland by AWE Forklifts

Phone +353 1 401 9919

Email info@awe.ie

Web awe.ie/mastermover?store-page=MasterTug-MT600-Plus-p35672103

Manufacturer brochure follows. Contact AWE for a written quote, demo or on-site visit.

MasterMover®

MT600+

Battery powered electric tug

MT600+

kg
6,000

Overview

The MasterTug range delivers unrivalled manoeuvrability when moving heavy-wheeled loads. Utilising a unique weight transfer principle, the MasterTug range can move heavy weights whilst retaining an incredibly compact machine footprint.

The design makes the MasterTug range perfect for working in confined spaces and facilitating precise movements.

With ergonomic controls, lightweight steering and an intuitive design, MasterTug takes the strain and empowers an operator to move heavy loads with complete control. A secure coupling system maximises load security and performance, guaranteeing total peace of mind.

The powerful performance of the MasterTug allows operators to push, pull and steer loads inside, outside and on slopes with complete control.

Key Features

Safety

- Audible horn, flashing safety light, emergency stop button and anti-crush button
- Speed control with an optional two-speed selector switch for maximum control
- Complete load security

Power

- AC motor optimises speed and power
- Slide out, interchangeable batteries deliver 24/7 performance
- Optional Battery Protection System maximises longevity

Performance

- Powerful weight-moving capabilities through weight transfer
- Start, move and stop movement on slopes
- Optimised hydraulics guarantee a smooth connection and movement

Connection

- Secure coupling system delivers controlled movement of loads
- Unique mast design enables operators to connect to loads at different heights
- CombiCoupling, BoxCoupling and custom coupling options available

MasterMover

Dimensions

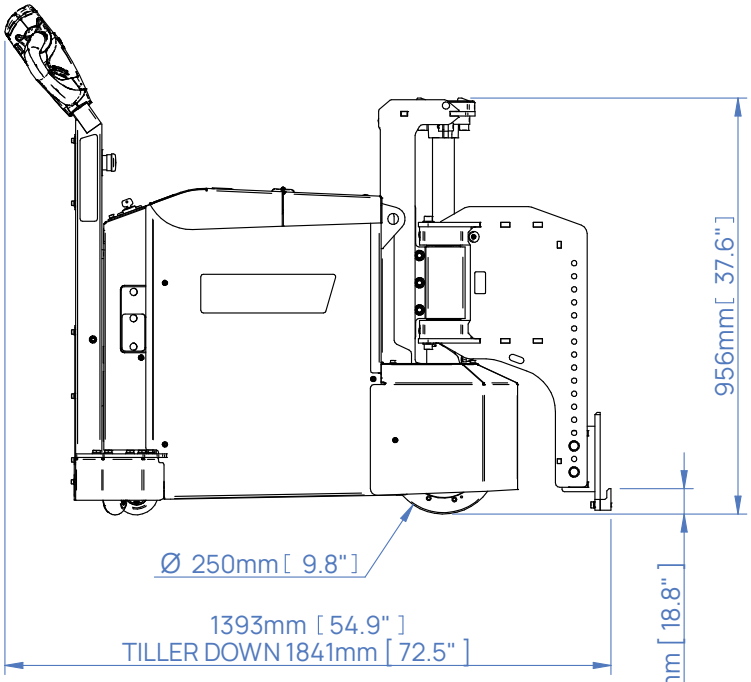
956mm [37.6"]
Ø 250mm [9.8"]
1393mm [54.9"]
TILLER DOWN 1841mm [72.5"]
58mm [2.3"] - 478mm [18.8"]

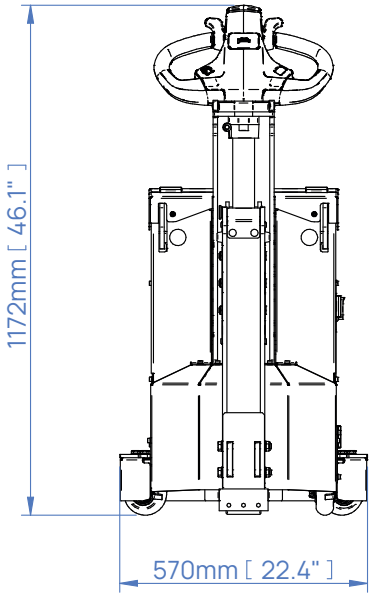
1172mm [46.1"]
570mm [22.4"]

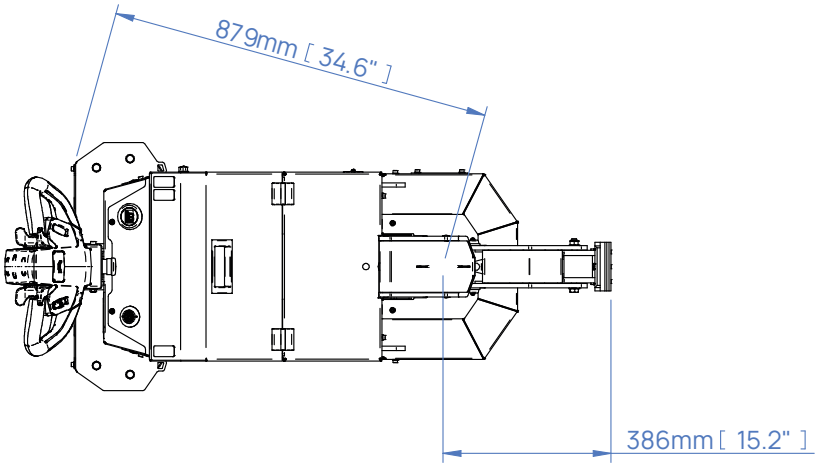
879mm [34.6"]
386mm [15.2"]

Slope Performance

The force required to move a load is based on load weight, slope angle and floor condition. Movement on a slope increases the force required to safely start, stop and move the load.

If your application involves moving a load up or down a slope, speak to our team who will be happy to advise on which machine will meet your requirements.

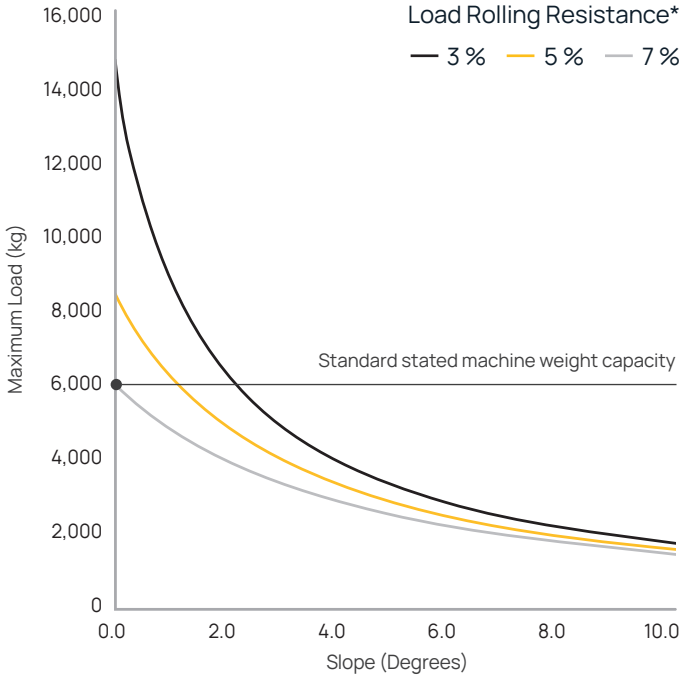

* Variables that affect rolling resistance include the quality of floor/terrain and the type/condition/quality of castor wheels.

In Application: MasterTug

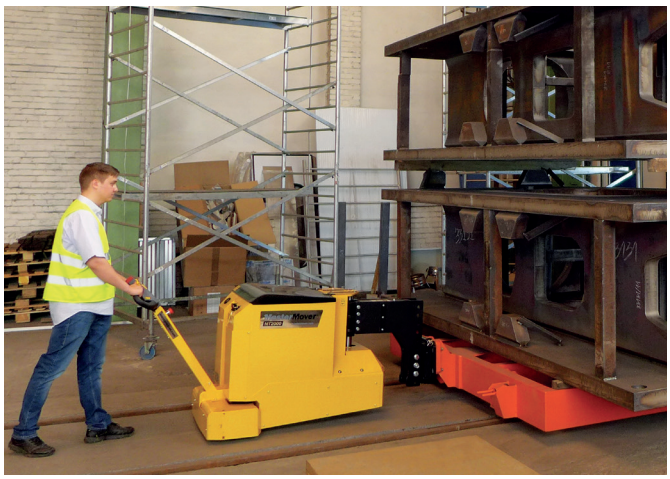

Standard Safety Features

Emergency Stop Button	Anti-Crush Button	Automatic Parking Brake
Warning Horn	**Automatic Cut Off**	**Floating Castor Guard**
	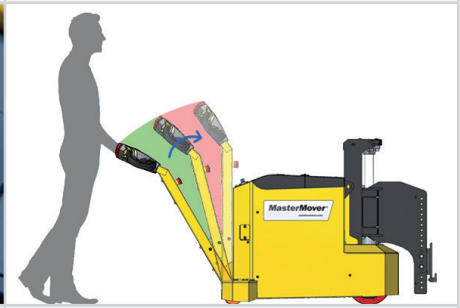	
Battery Discharge Indicator	**Key Switch**	

Machine Options

Additional AGM Battery **Z63-00300**	Two Speed Selector Switch **Z63-00501**	Flashing Light & Motion Beeper **Z63-00500**
Battery Protection System **Z63-00504**	Battery Transportation Trolley **Z63-00506**	Battery Transportation Stand **Z63-00505**
		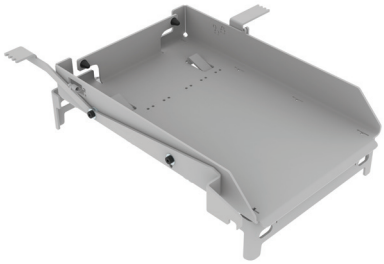
Quick Release Coupling Pins **Z63-00503**	CombiLock **Z63-00502**	Remote Control **Z63-00507**
	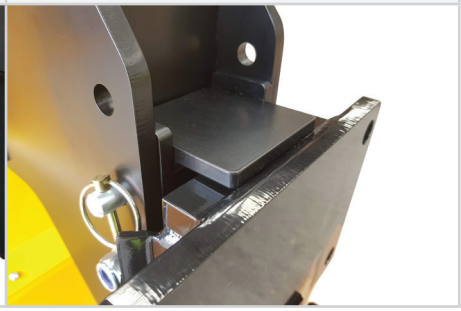	

Couplings

CombiCoupling
Z63-00600 male I Z63-00700 female

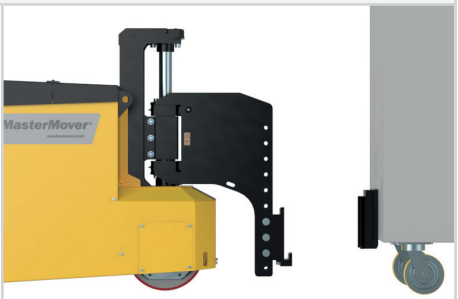

BoxCoupling
Z63-00601 male I Z63-00701 female

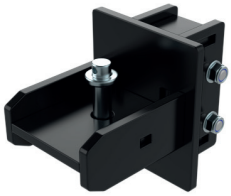

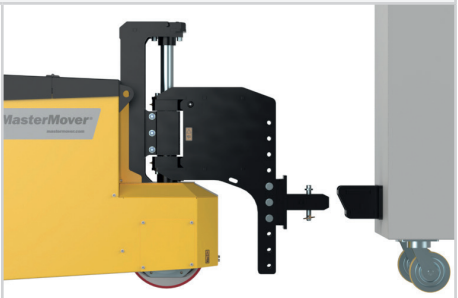

Custom Engineering

We understand that every application is different. Whether it's a custom coupling to connect to your load, modifying our electric tugs to work in a challenging environment, or designing an entirely new solution for your application, our Customer Engineering team are here to help.

For more information on our custom engineering capabilities, please visit: **mastermover.com/custom-solutions**
If you'd like to discuss your requirements, speak to your sales representative or email: **sales@mastermover.com**

Technical Specification

Machine	
Product code	Z63-00100
Maximum load (on castors I on rails)	6,000 kg I 24,000 kg
Maximum (push force I pull force)	4,120 N I 4,120 N
Machine weight	232 kg
Battery weight (standard)	105 kg
Combined machine & battery weight (standard)	337 kg
Drive type	Electric
Braking	Regenerative
Parking brake	Electromagnetic
Drive wheel type	Non-Marking Polyurethane
Castor wheel type	Non-Marking Polyurethane
Drive wheel diameter	250 mm
Point loading	0.49 (kg/mm²) 4.80 [N/mm²]
Drive motor power	1 kW
Controller type	AC
Standard machine speed (no speed selector switch)	2 KPH
Hare mode speed (With two speed selector switch)	3 KPH
Tortoise mode speed (With two speed selector switch)	1.2 KPH
Maximum slope	8°
Voltage	24 v
Noise level	Motor ≤80 dBA I Flashing light ≤85 dBA I Horn ≤112 dBA
Metal work finish	Powder coat paint & zinc plated
IP rating	IP44
Hydraulic Specification	
Maximum Lift Force at the Coupling	1,121 kg
AGM Battery	
Product code	Z63-00300 I Z63-00301
Battery pack capacity	102 Ah I 119 Ah
Maximum distance per charge*	8.4 km I 9.8 km
Charge time (External charger)	7 hrs I 8 hrs 10 mins
Charge time (Internal charger)	7 hrs I 8 hrs 10 mins
External Charger	
Product code	Z63-00400 I Z63-00402
Input voltage	85 - 265 v
Hertz	50 - 60 Hz
Amps	15 A I 20 A**
Phase (single, three)	Single
IP Rating	IP30

**20 A charger option only available with 119 Ah battery.

MasterMover

MT600+

* Based on 75% of maximum machine load weight on a flat floor on castors.

Technical Specification

Internal Charging	
Product code	Z63-00401 I Z63-00403
Input voltage	85 - 265 v
Hertz	50 - 60 Hz
Amps	15 A I 20 Ah**
Phase (single, three)	Single
IP rating	IP30
Lithium Battery	
Product code	Z63-00302
Battery pack capacity	60 Ah
Maximum distance per charge*	6.1 km
Charge time (External charger)	2 hrs 30 mins
External Charging	
Product code	Z63-00404
Input voltage	85 - 265 v
Hertz	50 - 60 Hz
Amps	20 A
Phase (single, three)	Single
IP rating	IP30
Coupling	
CombiCoupling (male I female)	Optional
BoxCoupling (male I female)	Optional
Safety	
Key Switch	Standard
Emergency Stop	Standard
Battery Discharge Indicator	Standard
Anti-Crush Button	Standard
Warning Horn	Standard
Automatic Cut Off (as tiller arm returns to vertical)	Standard
Automatic Parking Brake	Standard
Integrated Lift Points	Standard
Integrated Tie-Down Points	Standard
Floating Castor Guard	Standard
Options	
Additional AGM Battery	Optional
Flashing Safety Light and Motion Bleeper	Optional
Two Speed Selector Switch	Optional
CombiLock	Optional
Quick Release Coupling Pins	Optional

**20 A charger option only available with 119 Ah battery.

* Based on 75% of maximum machine load weight on a flat floor on castors.

Technical Specification

Battery Protection System	**Optional**
Battery Transportation Stand	**Optional**
Battery Transportation Trolley	**Optional**
Remote Control	**Optional**

MasterMover®

mastermover.com

© Copyright 2023

UK CA CE ISO 9001 ISO 45001