AUTHORISED MASTERMOVER DEALER, IRELAND

# MasterMover MasterTug MT800+

Product brochure

**Supplied, serviced and supported in Ireland by AWE Forklifts**

Phone +353 1 401 9919

Email info@awe.ie

Web awe.ie/mastermover?store-page=MasterTug-MT800-Plus-p35672104

Manufacturer brochure follows. Contact AWE for a written quote, demo or on-site visit.

MasterMover®

# MT800+

Battery powered electric tug

# MT800+

kg
8,000

## Overview

The MasterTug range delivers unrivalled manoeuvrability when moving heavy-wheeled loads. Utilising a unique weight transfer principle, the MasterTug range can move heavy weights whilst retaining an incredibly compact machine footprint.

The design makes the MasterTug range perfect for working in confined spaces and facilitating precise movements.

With ergonomic controls, lightweight steering and an intuitive design, MasterTug takes the strain and empowers an operator to move heavy loads with complete control. A secure coupling system maximises load security and performance, guaranteeing total peace of mind.

The powerful performance of the MasterTug allows operators to push, pull and steer loads inside, outside and on slopes with complete control.

## Key Features

### Safety

- Audible horn, flashing safety light, emergency stop button and anti-crush button
- Speed control with an optional two-speed selector switch for maximum control
- Complete load security

### Power

- AC motor optimises speed and power
- Slide out, interchangeable batteries deliver 24/7 performance
- Optional Battery Protection System maximises longevity

### Performance

- Powerful weight-moving capabilities through weight transfer
- Start, move and stop movement on slopes
- Optimised hydraulics guarantee a smooth connection and movement

### Connection

- Secure coupling system delivers controlled movement of loads
- Unique mast design enables operators to connect to loads at different heights
- CombiCoupling, BoxCoupling and custom coupling options available

MasterMover

# Dimensions

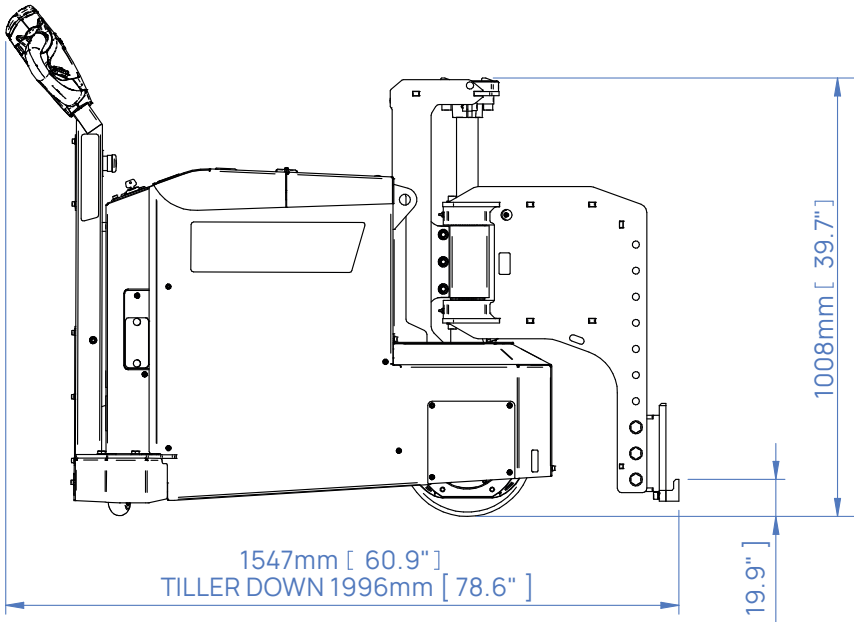
1008mm [ 39.7" ]
1547mm [ 60.9" ]
TILLER DOWN 1996mm [ 78.6" ]
85mm [ 3.4" ] - 505mm [ 19.9" ]

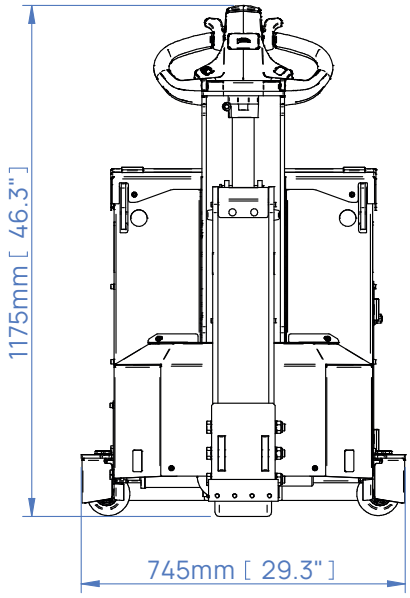
1175mm [ 46.3" ]
745mm [ 29.3" ]

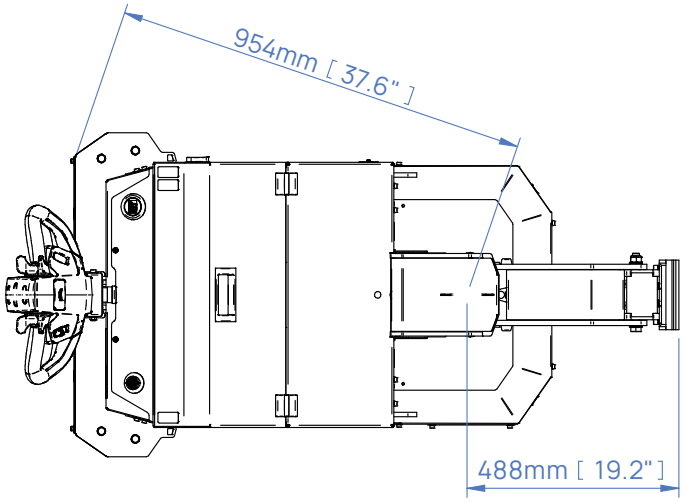
954mm [ 37.6" ]
488mm [ 19.2" ]

# Slope Performance

The force required to move a load is based on load weight, slope angle and floor condition. Movement on a slope increases the force required to safely start, stop and move the load.

If your application involves moving a load up or down a slope, speak to our team who will be happy to advise on which machine will meet your requirements.

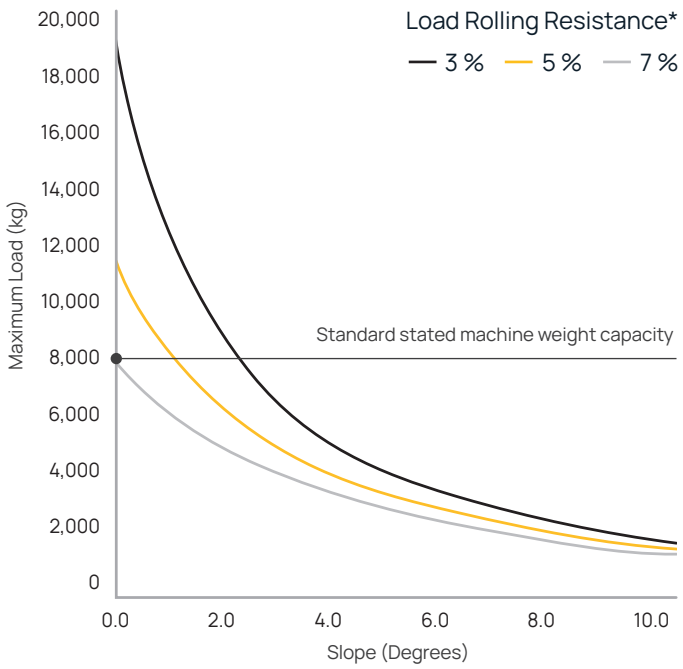


* Variables that affect rolling resistance include the quality of floor/terrain and the type/condition/quality of castor wheels.

# In Application: MasterTug

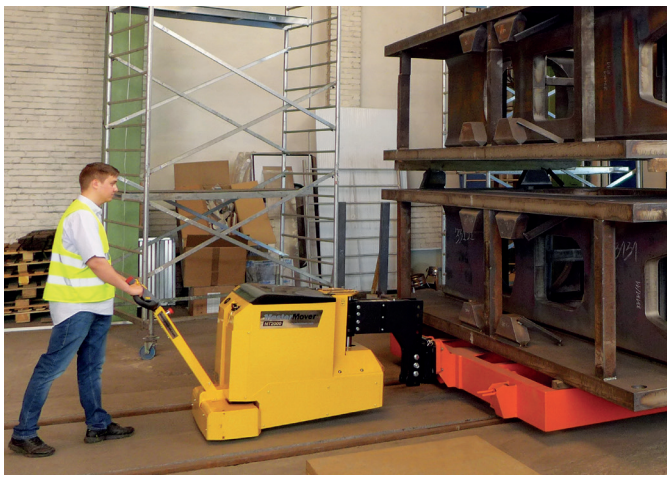

# Standard Safety Features

| Emergency Stop Button | Anti-Crush Button | Automatic Parking Brake |
|---|---|---|
| | | |
| **Warning Horn** | **Automatic Cut Off** | **Floating Castor Guard** |
| | 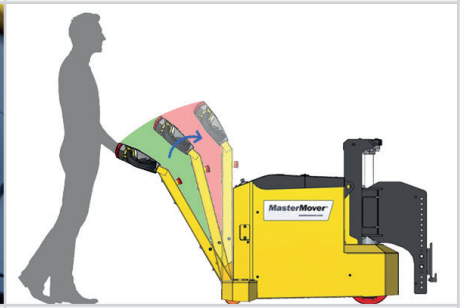 | |
| **Battery Discharge Indicator** | **Key Switch** | |
| | | |

# Machine Options

| | | |
|---|---|---|
| Additional AGM Battery<br>**Z63-00300** | Two Speed Selector Switch<br>**Z64-00501** | Flashing Light & Motion Beeper<br>**Z64-00500** |
| | | |
| Battery Protection System<br>**Z64-00504** | Battery Transportation Trolley<br>**Z64-00506** | Battery Transportation Stand<br>**Z64-00505** |
| | | 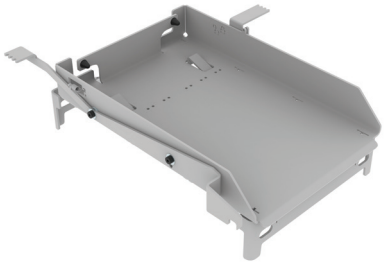 |
| CombiLock<br>**Z64-00502** | Remote Control<br>**Z64-00507** | |
| 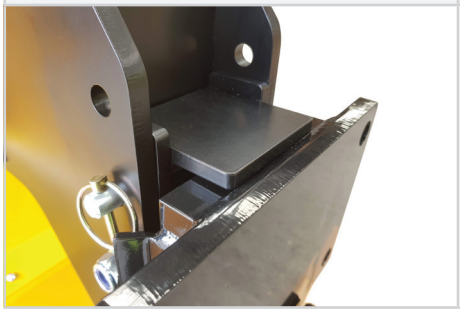 | | |

# Couplings

CombiCoupling
**Z64-00600 male I Z64-00700 female**

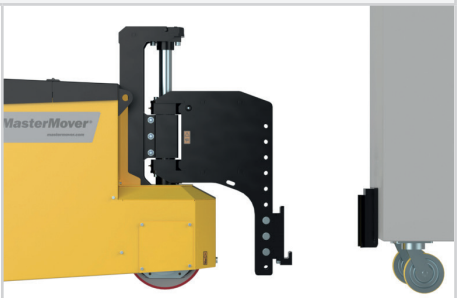


BoxCoupling
**Z64-00601 male I Z64-00701 female**

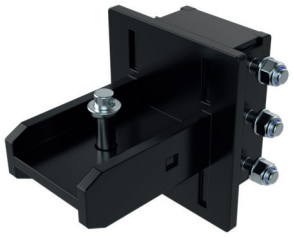

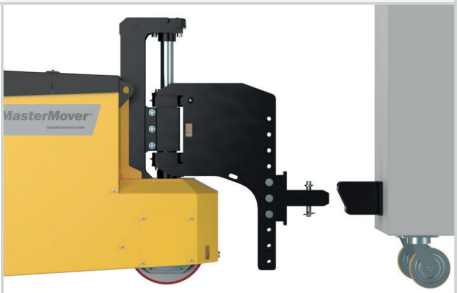


## Custom Engineering

We understand that every application is different. Whether it's a custom coupling to connect to your load, modifying our electric tugs to work in a challenging environment, or designing an entirely new solution for your application, our Customer Engineering team are here to help.

For more information on our custom engineering capabilities, please visit: **mastermover.com/custom-solutions**
If you'd like to discuss your requirements, speak to your sales representative or email: **sales@mastermover.com**

# Technical Specification

| Machine | |
|---|---|
| Product code | Z64-00100 |
| Maximum load (on castors I on rails) | 8,000 kg I 32,000 kg |
| Maximum (push force I pull force) | 5,492 N I 5,492 N |
| Machine weight | 348 kg |
| Battery weight (standard) | 143 kg |
| Combined machine & battery weight (standard) | 491 kg |
| Drive type | Electric |
| Braking | Regenerative |
| Parking brake | Electromagnetic |
| Drive wheel type | Non-Marking Polyurethane |
| Castor wheel type | Non-Marking Polyurethane |
| Drive wheel diameter | 300 mm |
| Point loading | 0.5 (kg/mm²) 4.90 [N/mm²] |
| Drive motor power | 2 kW |
| Controller type | AC |
| Standard machine speed (no speed selector switch) | 2 KPH |
| Hare mode speed (With two speed selector switch) | 3 KPH |
| Tortoise mode speed (With two speed selector switch) | 1.2 KPH |
| Maximum slope | 8° |
| Voltage | 24 v |
| Noise level | Motor ≤80 dBA I Flashing light ≤85 dBA I Horn ≤112 dBA |
| Metal work finish | Powder coat paint & zinc plated |
| IP rating | IP44 |
| **Hydraulic Specification** | |
| Maximum Lift Force at the Coupling | 2,161 kg |
| **AGM Battery** | |
| Product code | Z64-00300 |
| Battery pack capacity | 179 Ah |
| Maximum distance per charge* | 11.7 km |
| Charge time (External charger) | 6 hrs |
| Charge time (Internal charger) | 9 hrs |
| **External Charger** | |
| Product code | Z64-00400 |
| Input voltage | 85 - 265 v |
| Hertz | 50 - 60 Hz |
| Amps | 30 A |
| Phase (single, three) | Single |
| IP Rating | IP30 |



* Based on 75% of maximum machine load weight on a flat floor on castors.

# Technical Specification

| Internal Charging | |
|---|---|
| Product code | Z64-00401 |
| Input voltage | 85 - 265 v |
| Hertz | 50 - 60 Hz |
| Amps | 20A |
| Phase (single, three) | Single |
| IP rating | IP30 |
| **Lithium Battery** | |
| Product code | Z64-00302 |
| Battery pack capacity | 120 Ah |
| Maximum distance per charge* | 7.9 km |
| Charge time (External charger) | 3 hrs |
| **External Charging** | |
| Product code | Z64-00402 |
| Input voltage | 85 - 265 v |
| Hertz | 50 - 60 Hz |
| Amps | 40 A |
| Phase (single, three) | Single |
| IP rating | IP30 |
| **Coupling** | |
| CombiCoupling (male I female) | Optional |
| BoxCoupling (male I female) | Optional |
| **Safety** | |
| Key Switch | Standard |
| Emergency Stop | Standard |
| Battery Discharge Indicator | Standard |
| Anti-Crush Button | Standard |
| Warning Horn | Standard |
| Automatic Cut Off (as tiller arm returns to vertical) | Standard |
| Automatic Parking Brake | Standard |
| Integrated Lift Points | Standard |
| Integrated Tie-Down Points | Standard |
| Floating Castor Guard | Standard |
| **Options** | |
| Additional AGM Battery | Optional |
| Flashing Safety Light and Motion Bleeper | Optional |
| Two Speed Selector Switch | Optional |
| CombiLock | Optional |
| Battery Protection System | Optional |



* Based on 75% of maximum machine load weight on a flat floor on castors.

# Technical Specification

| | |
|---|---|
| Battery Transportation Stand | **Optional** |
| Battery Transportation Trolley | **Optional** |
| Remote Control | **Optional** |

MasterMover®

mastermover.com

© Copyright 2023

UK CA CE ISO 9001 ISO 45001