AUTHORISED MASTERMOVER DEALER, IRELAND

MasterMover PowerSteered PS2000+

Product brochure

Supplied, serviced and supported in Ireland by AWE Forklifts

Phone +353 1 401 9919

Email info@awe.ie

Web awe.ie/mastermover?store-page=PowerSteered-PS2000-Plus-p35672306

Manufacturer brochure follows. Contact AWE for a written quote, demo or on-site visit.

MasterMover®

PS2000+

Battery powered electric tug

PS2000+

kg
20,000

Overview

The PowerSteered range allows a single operator to move loads with fingertip control for effortless movement. Benefit from intuitive power steering to make light work of moving the heaviest loads to drive safer, more efficient operations.

The range is available with unparalleled control options, offering a solution for every heavy load-moving challenge. Choose from pedestrian-operated, remote control and even fully autonomous AGV options for maximum efficiency.

The robust design of the PowerSteered range guarantees unrivalled weight-moving performance. A secure coupling system ensures a rigid connection to the load, and a compact machine footprint delivers excellent manoeuvrability.

Our PowerSteered electric tugs can be equipped with MultiLink technology, allowing multiple tugs to operate in unison under a single operator's control, providing combined weight-moving performance and enhanced steering capabilities.

Key Features

Safety

- A range of control modes deliver maximum operator safety
- Audible horn, flashing beacon, performance monitoring and emergency safety shut-off
- Speed control with two-speed selector switch

Performance

- Highly manoeuvrable for precise movement in tight spaces
- Unrivalled visibility for operators
- Powerful hydraulic system maximises load security and power holding loads even on slopes
- MultiLink and AGV options enable future scalability

Power

- High performance, maintenance-free interchangeable batteries for 24/7 operation
- Optional Battery Protection System maximises longevity
- Compact design, yet high power output

Connection

- Heavy-duty hydraulic coupling system ensures maximum load security and performance
- Self-levelling hydraulics enable secure movements even on slopes
- Optional smart coupling allows for MultiLink capabilities

MasterMover

Dimensions

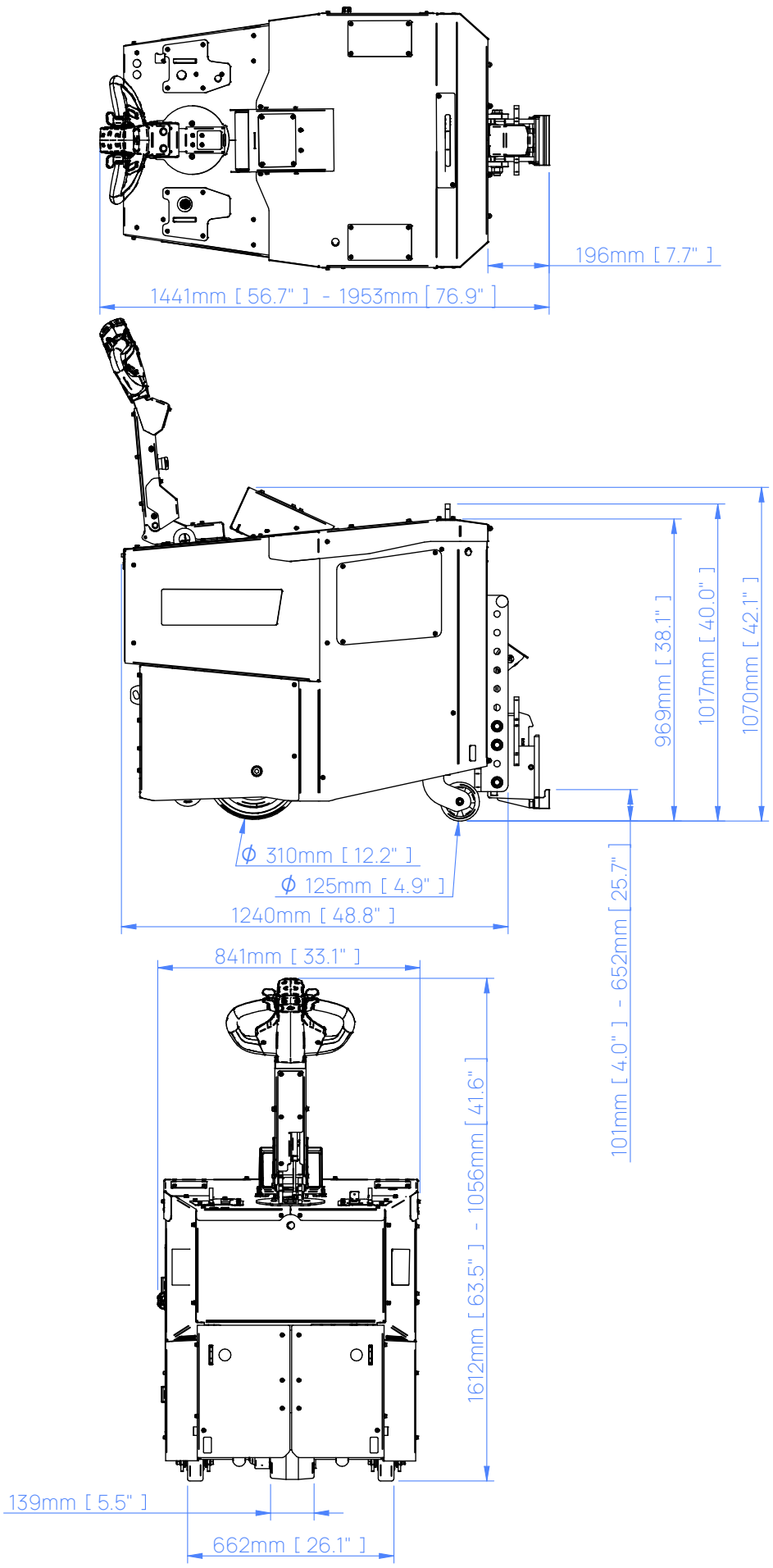
196mm [7.7"]
1441mm [56.7"] - 1953mm [76.9"]
969mm [38.1"]
1017mm [40.0"]
1070mm [42.1"]
ϕ 310mm [12.2"]
ϕ 125mm [4.9"]
1240mm [48.8"]
101mm [4.0"] - 652mm [25.7"]
841mm [33.1"]
1612mm [63.5"] - 1056mm [41.6"]
139mm [5.5"]
662mm [26.1"]

Slope Performance

The force required to move a load is based on load weight, slope angle and floor condition. Movement on a slope increases the force required to safely start, stop and move the load.

If your application involves moving a load up or down a slope, speak to our team who will be happy to advise on which machine will meet your requirements.

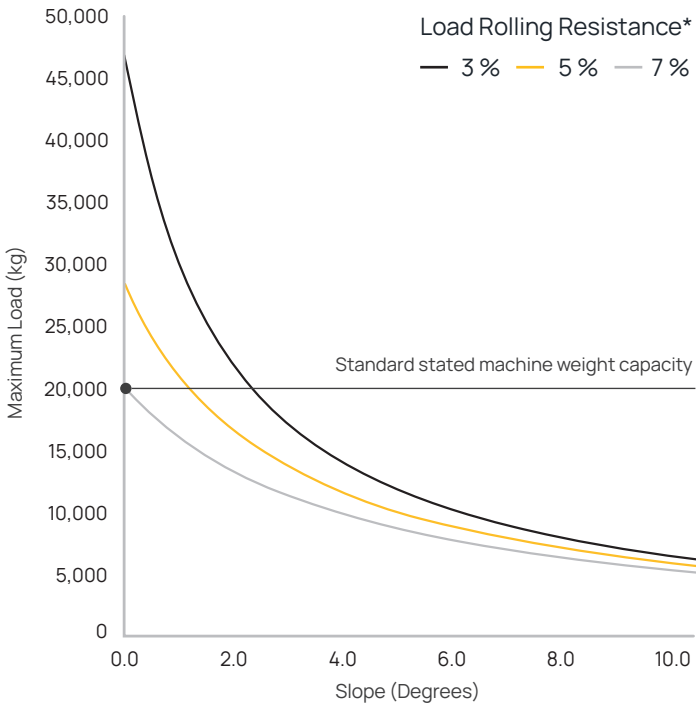

* Variables that affect rolling resistance include the quality of floor/terrain and the type/condition/quality of castor wheels.

In Application: PowerSteered

Standard Safety Features

Emergency Stop Button	Automatic Parking Brake	Warning Horn
Auto CombiLock	Coupling Status Indicator	Coupling Assist Screen
		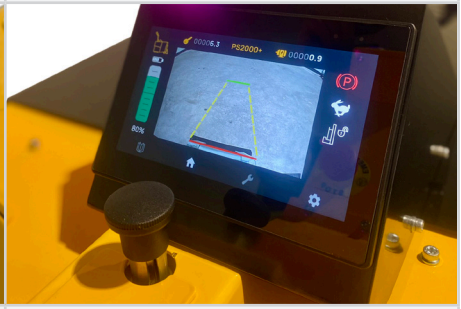
Weight Transfer Indicator	Self-Levelling Hydraulics	Floating Castor Guard
	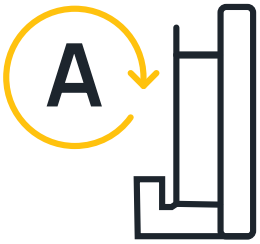	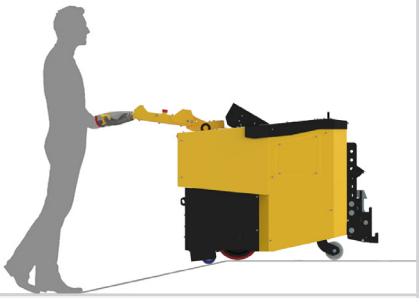
Two Speed Selector Switch	BDI	Key Switch

Machine Options

Additional AGM Battery **Z124-00301**	Flashing Safety Light and Motion Bleeper **Z124-00500**	Status Light **Z124-00501**
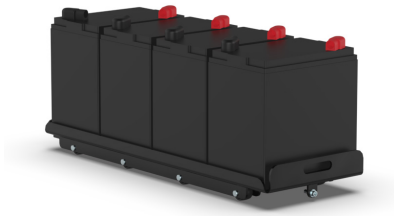		
Battery Transportation Stand **Z124-00502**	Battery Protection System **Z124-00506**	Lithium Battery
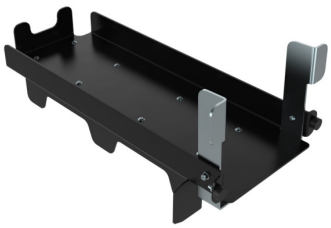	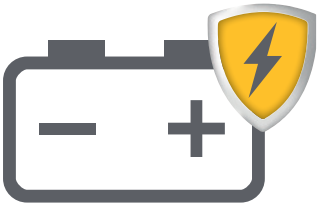	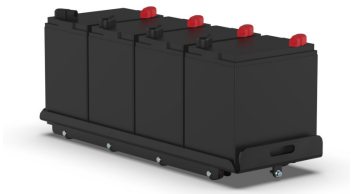
Additional Wireless E-Stop **Z124-00509**		

Machine Options

Pedestrian Remote Control	**Z124-00503 Tiller I Z124-00504 No tiller**
	Allow your operator to take up the ideal vantage point and step away from the load with remote control operation. Offering precise and controlled movement, the remote control handset features a warning horn and emergency stop functions for added safety. Specify your machine with a tiller arm to benefit from flexibility of both pedestrian and remote control operation or choose a fully-remote controlled machine for fingertip control.
TillerLink	
	Combine the power and control of two machines to improve manoeuvrability and positioning. A single operator can simultaneously steer both machines to deliver an unmatched 360-degree turning ability – ideal for awkward loads requiring precise positioning.
MultiLink	
	Our innovative MultiLink technology enables multiple machines to be controlled by a single operator – all via remote control. MultiLink technology allows you to combine the power of multiple machines for enhanced weight-moving performance. Delivering unrivalled visibility and manoeuvrability, it is the perfect solution for large, heavy and awkward loads.
Wireless Autosteer	**Z124-00507**
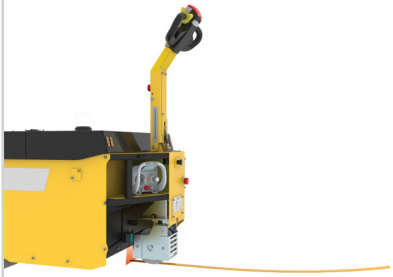	Combining the power of remote control operation and line follow navigation, Wireless AutoSteer means the electric tug follows a predefined route marked out by a line on the floor, with the operator controlling speed. A great option for tight spaces and when movement should follow the same route, every time. The machine can still be used through standard manual operation when required.
AGV Line Follow	
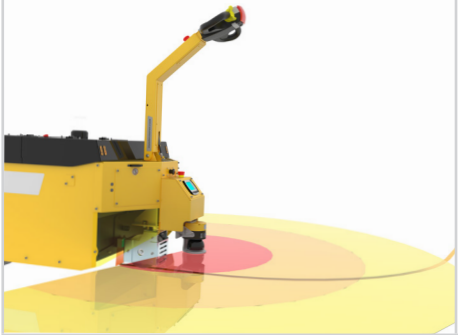	Benefit from autonomous operation, and remove the need for operators to move loads. Your electric tug will autonomously travel between locations, using a line on the floor for navigation. Barcodes can additionally be used to change machine behaviours, such as to speed up, slow down or stop the machine. Scanners and safety systems identify risks and take appropriate action, restarting movement when a hazard is removed. The machine can still be used through standard manual operation when required.

Couplings

CombiCoupling
Z124-00600 male I Z124-00700 female

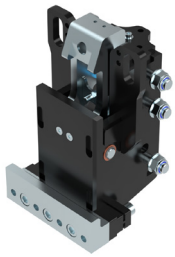

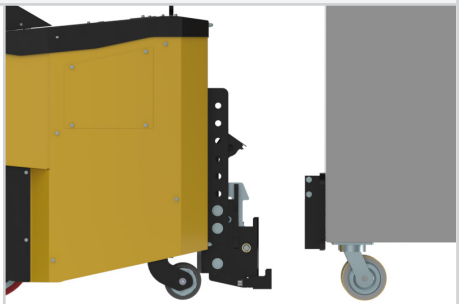

Smart Coupling†
Z124-00601 male I Z124-00701 female

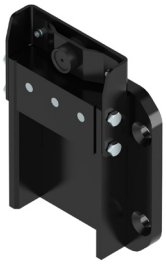
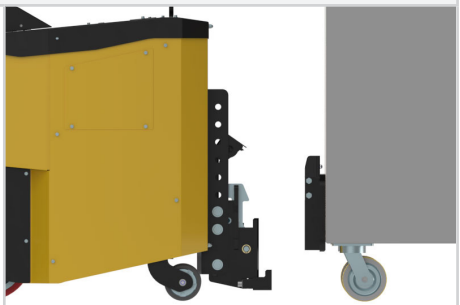

Custom Engineering

We understand that every application is different. Whether it's a custom coupling to connect to your load, modifying our electric tugs to work in a challenging environment, or designing an entirely new solution for your application, our Customer Engineering team are here to help.

For more information on our custom engineering capabilities, please visit: **mastermover.com/custom-solutions**
If you'd like to discuss your requirements, speak to your sales representative or email: **sales@mastermover.com**

†Standard with MultiLink.

Technical Specification

Machine	
Product code	Z124-00100
Maximum load (on castors I on rails)	20,000 kg I 80,000 kg
Maximum force (push I pull)	13,729 N I 13,729 N
Machine weight	780 kg
Battery weight (standard)	136 kg
Combined machine & battery weight	916 kg
Drive type	Electric
Braking	Regenerative
Parking brake	Electromagnetic
Drive wheel type	Non-marking Polyurethane
Rear caster wheel type	Non-marking Polyurethane
Front wheel type	Non-marking vulcanized elastic
Drive Wheel diameter	310 mm
Drive motor power	3.5 kW
Controller type	AC
Hare mode speed (With two speed selector switch)	4 KPH
Tortoise mode speed (With two speed selector switch)	1.2 KPH
Maximum slope*	8°
Voltage	24 v
Noise level	Motor ≤80 dBA I Flashing light ≤85 dBA I Horn ≤112 dBA
Metal work finish	Powder coat paint & zinc plated
IP rating	IP44
Hydraulic Specification	
Maximum Lift Force at the Coupling	2,357 kg
AGM Battery	
Product code (Fixed I Interchangable)	Z124-00300 I Z124-00301
Battery pack capacity	120 Ah
Maximum distance per charge*	5.9 km
Charge time (External charger)	8 hrs 30 mins
External Charger	
Product code	Z124-00400
Input voltage	85 - 265 v
Hertz	50 - 60 Hz
Amps	20 A
Phase (single, three)	Single
IP Rating	IP30

* Based on 75% of maximum machine load weight on a flat floor on castors.

Technical Specification

Internal Charger	
Product code	Z124-00401
Input voltage	85 - 265 v
Hertz	50 - 60 Hz
Amps	20 A
Phase (single, three)	Single
IP Rating	IP30
Coupling	
CombiCoupling (male I female)	Optional
Smart Coupling† (male I female)	Optional
Safety	
Key Switch	Standard
Emergency Stop	Standard
BDI	Standard
Two Speed Selector Switch	Standard
Automatic Parking Brake	Standard
Warning Horn	Standard
Weight Transfer Indicator	Standard
Self-Levelling Hydraulics	Standard
Integrated Lifting and Tie-Down Points	Standard
Floating Castor Guard	Standard
Coupling Status Indicator	Standard
Auto CombiLock	Standard
Coupling Assist Screen	Standard
Options	
Additional AGM Battery	Optional
Lithium Battery	Optional
Flashing Safety Light and Motion Bleeper	Optional
Status Light	Optional
Battery Transportation Stand	Optional
Battery Protection System	Optional
Wireless E-Stop	Optional
Remote Control - tiller	Optional
Remote Control - no tiller	Optional
TillerLink	Optional
MultiLink	Optional
Wireless Autosteer	Optional
AGV Line Follow	Optional

†Standard with MultiLink.

MasterMover®

mastermover.com

© Copyright 2025

UK CA CE ISO 9001 ISO 45001