AUTHORISED MASTERMOVER DEALER, IRELAND

MasterMover PowerSteered PS7000+

Product brochure

Supplied, serviced and supported in Ireland by AWE Forklifts

Phone +353 1 401 9919

Email info@awe.ie

Web awe.ie/mastermover?store-page=PowerSteered-PS7000-Plus-p35672307

Manufacturer brochure follows. Contact AWE for a written quote, demo or on-site visit.

MasterMover®

PS7000+

Battery powered electric tug

PS7000+

kg
70,000

Overview

The PoweredSteered range allows a single operator to move the heaviest loads through remote controlled operation. By using wireless technology, the operator can step away from the load to take up the ideal viewing point, maximising safety.

Alongside a remote control operation, the robust design of the PowerSteered range guarantees unrivalled weight-moving performance. A secure coupling system ensures maximises connection to the load, and a compact machine footprint delivers maximum manoeuvrability.

PowerSteered electric tugs are available with MultiLink technology, which allows multiple electric tugs to work together under the control of a single operator, enabling combined weight moving performance and unrivalled manoeuvrability.

In addition, PowerSteered machines are also available as Automated Guided Vehicles (AGV) for maximum ROI, safety and operational efficiency.

Key Features

Safety

- Full wireless operation for maximum visibility
- Audible horn, flashing beacon, performance monitoring and emergency safety shut-off
- Speed control with two-speed selector switch

Performance

- Highly manoeuvrable for precise movement in tight spaces
- Unrivalled visibility for operators
- Powerful hydraulic system maximises load security and power holding loads even on slopes
- MultiLink and AGV options enable future scalability

Power

- High performance, maintenance-free interchangeable batteries for 24/7 operation
- Optional Battery Protection System maximises longevity
- Compact design, yet high power output

Connection

- Heavy-duty hydraulic coupling system ensures maximum load security and performance
- Self-levelling hydraulics enable secure movements even on slopes
- Optional smart coupling allows for MultiLink capabilities

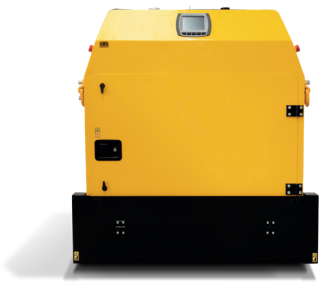

MasterMover

Dimensions

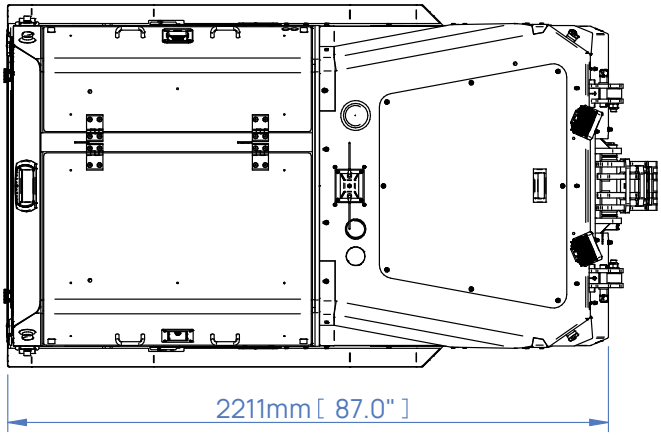
2211mm [87.0"]

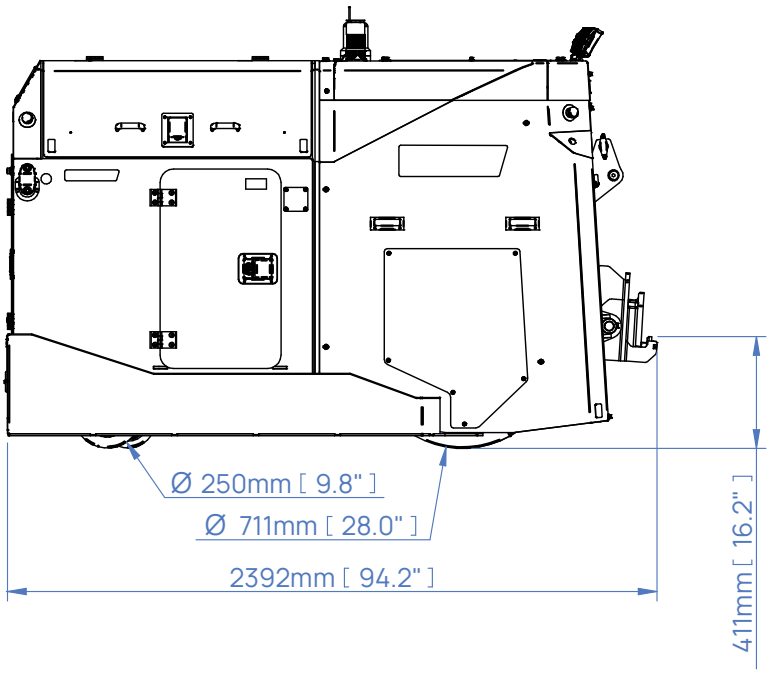
Ø 250mm [9.8"]
Ø 711mm [28.0"]
2392mm [94.2"]
411mm [16.2"]

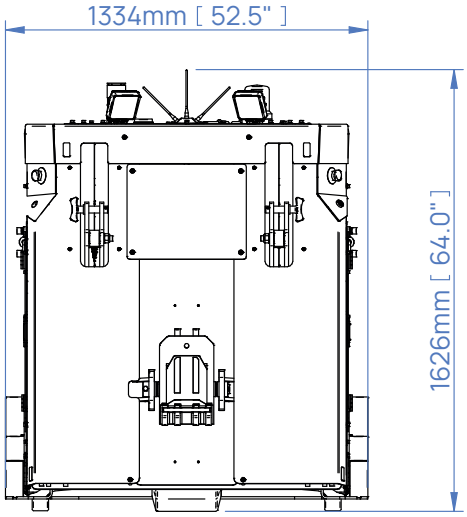
1334mm [52.5"]
1626mm [64.0"]

Slope Performance

The force required to move a load is based on load weight, slope angle and floor condition. Movement on a slope increases the force required to safely start, stop and move the load.

If your application involves moving a load up or down a slope, speak to our team who will be happy to advise on which machine will meet your requirements.

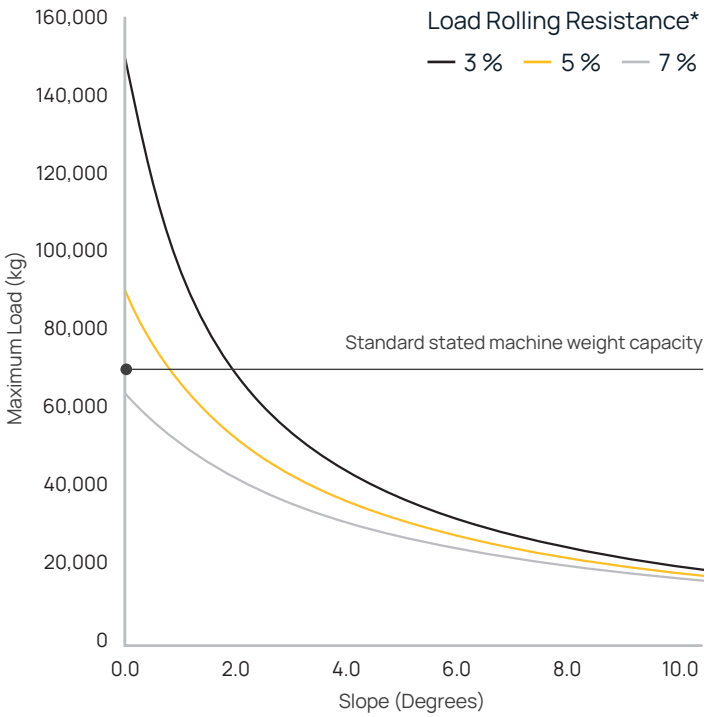

* Variables that affect rolling resistance include the quality of floor/terrain and the type/condition/quality of castor wheels.

In Application: PowerSteered

Standard Safety Features

Emergency Stop Button	Flashing Light and Motion Bleeper	Automatic Parking Brake
Warning Horn	Floating Castor Guard	Remote Control
	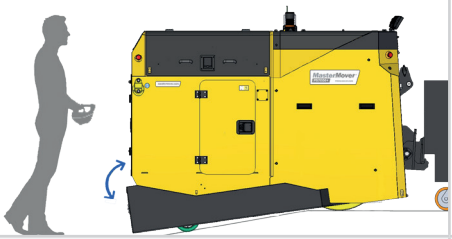	
Display Screen	Status Light	Two Speed Selector Switch
Self-levelling Hydraulics	Auto Hydraulics	Headlights
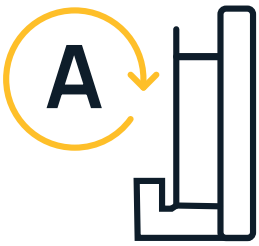		
Key Switch		

Machine Options

Additional AGM Battery **Z134-00300**	Additional Wireless E-Stop **Z134-00509**	Battery Charging Station **Z134-00403**
Battery Protection System **Z134-00508**		
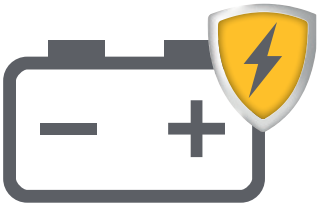		

Couplings

CombiCoupling - 3 point
Z134-00600 male I Z134-00700 female

SmartCoupling - 3 point
Z134-00601 male I Z134-00701 female

Custom Engineering

We understand that every application is different. Whether it's a custom coupling to connect to your load, modifying our electric tugs to work in a challenging environment, or designing an entirely new solution for your application, our Customer Engineering team are here to help.

For more information on our custom engineering capabilities, please visit: **mastermover.com/custom-solutions**
If you'd like to discuss your requirements, speak to your sales representative or email: **sales@mastermover.com**

Technical Specification

Machine	
Product code	Z134-00100
Maximum load (on castors I on rails)	70,000 kg I 280,000 kg
Maximum force (push I pull)	44,130 N I 44,145 N
Machine weight	2,600 kg
Battery weight (standard)	730 kg
Combined machine & battery weight (standard)	3,330 kg
Drive type	Electric
Braking	Regenerative
Parking brake	Electromagnetic
Drive wheel type	Non-Marking Polyurethane
Castor wheel type	Non-Marking Polyurethane
Drive wheel diameter	710 mm
Point loading	0.76 (kg/mm²) 7.5 [N/mm²]
Drive motor power	9 kW
Controller type	AC
Hare mode speed (with two speed selector switch)	3 KPH
Tortoise mode speed (with two speed selector switch)	1.2 KPH
Maximum slope	8°
Voltage	80 v
Noise level	Motor ≤80 dBA I Flashing light ≤85 dBA I Horn ≤112 dBA
Metal work finish	Powder coat paint & zinc plated
IP rating	IP64
Hydraulic Specification	
Maximum Lift Force at the Coupling	5,000 kg
AGM Battery	
Product code	Z134-00300
Battery pack capacity	190 Ah
Maximum distance per charge*	5 km
Charge time (external charger)	8 hrs
External Charger	
Product code	Z134-00400
Input voltage	240 v
Hertz	50 - 60 Hz
Amps	20 A
Phase (single, three)	Single
IP Rating	IP20

* Based on 75% of maximum machine load weight on a flat floor on castors.

Technical Specification

Couplings	
CombiCoupling - 3 point (male I female)	Optional
SmartCoupling - 3 point (male I female)	Optional
Safety	
Key Switch	Standard
Emergency Stop Button	Standard
Display Screen	Standard
Two Speed Selector Switch	Standard
Automatic Parking Brake	Standard
Warning Horn	Standard
Automatic Hydraulics	Standard
Integrated Lifting and Tie-Down Points	Standard
Floating Castor Guard	Standard
Remote Control	Standard
Flashing Light and Motion Bleeper	Standard
Status Light	Standard
Self-levelling Hydraulics	Standard
Headlights	Standard
Options	
Additional AGM Battery	Optional
Additional Wireless E-Stop	Optional
Battery Charging Station	Optional
Battery Protection System	Optional

* Based on 75% of maximum machine load weight on a flat floor on castors.

MasterMover®

mastermover.com

© Copyright 2023

UK CA CE ISO 9001 ISO 45001