AUTHORISED MASTERMOVER DEALER, IRELAND

MasterMover PowerSteered PS800+ LH

Product brochure

Supplied, serviced and supported in Ireland by AWE Forklifts

Phone +353 1 401 9919

Email info@awe.ie

Web awe.ie/mastermover?store-page=PowerSteered-PS800-Plus-LH-p35672303

Manufacturer brochure follows. Contact AWE for a written quote, demo or on-site visit.

MasterMover®

PS800+ LH

Battery powered electric tug

PS800+ LH

kg
8,000

Overview

The PowerSteered range allows a single operator to move loads with fingertip control for effortless movement. Benefit from intuitive power steering to make light work of moving the heaviest loads to drive safer, more efficient operations.

The range is available with unparalleled control options, offering a solution for every heavy load-moving challenge. Choose from pedestrian-operated, remote control and even fully autonomous AGV options for maximum efficiency.

The robust design of the PowerSteered range guarantees unrivalled weight-moving performance. A secure coupling system ensures a rigid connection to the load, and a compact machine footprint delivers excellent manoeuvrability.

Our PowerSteered electric tugs can be equipped with MultiLink technology, allowing multiple tugs to operate in unison under a single operator's control, providing combined weight-moving performance and enhanced steering capabilities.

Key Features

Safety

- A range of control modes deliver maximum operator safety
- Audible horn, flashing beacon, performance monitoring and emergency safety shut-off
- Speed control with two-speed selector switch

Performance

- Highly manoeuvrable for precise movement in tight spaces
- Unrivalled visibility for operators
- Powerful hydraulic system maximises load security and power holding loads even on slopes
- MultiLink and AGV options enable future scalability

Power

- High performance, maintenance-free interchangeable batteries for 24/7 operation
- Optional Battery Protection System maximises longevity
- Compact design, yet high power output

Connection

- Heavy-duty hydraulic coupling system ensures maximum load security and performance
- Self-levelling hydraulics enable secure movements even on slopes
- Optional smart coupling allows for MultiLink capabilities

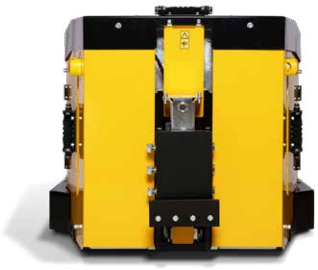

MasterMover

Dimensions

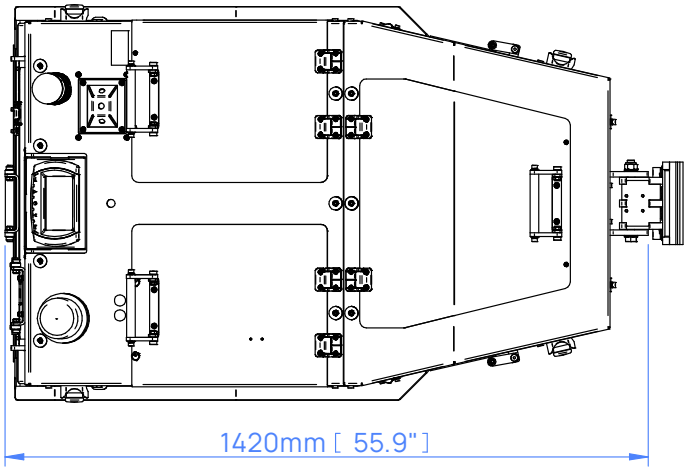
1420mm [55.9"]

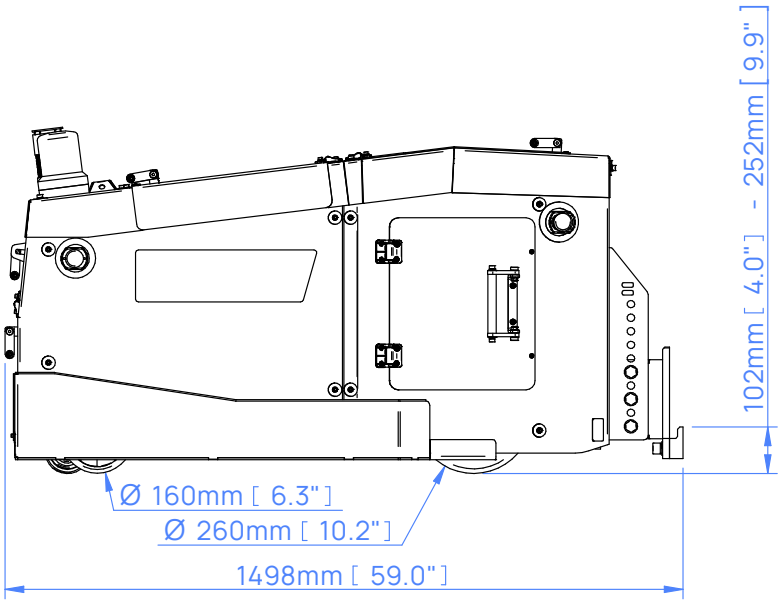
102mm [4.0"] - 252mm [9.9"]
Ø 160mm [6.3"]
Ø 260mm [10.2"]
1498mm [59.0"]

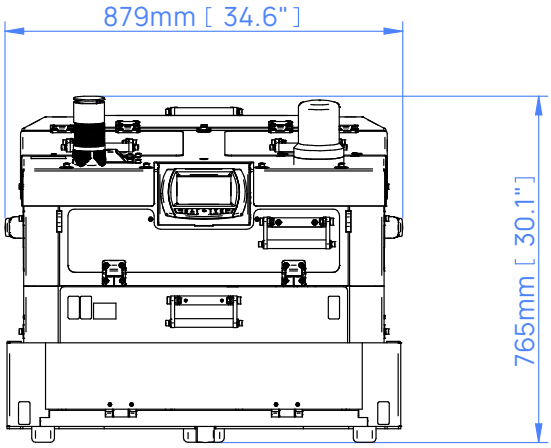
879mm [34.6"]
765mm [30.1"]

Slope Performance

The force required to move a load is based on load weight, slope angle and floor condition. Movement on a slope increases the force required to safely start, stop and move the load.

If your application involves moving a load up or down a slope, speak to our team who will be happy to advise on which machine will meet your requirements.

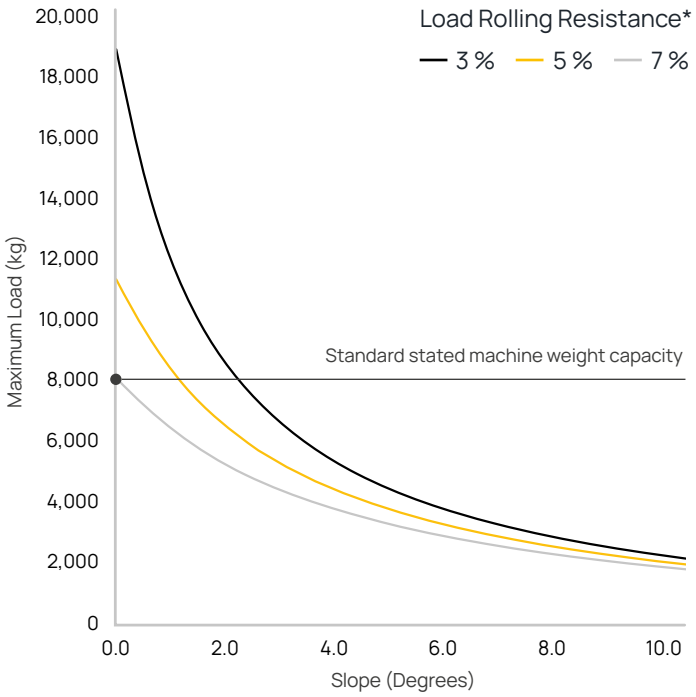

* Variables that affect rolling resistance include the quality of floor/terrain and the type/condition/quality of castor wheels.

In Application: PowerSteered

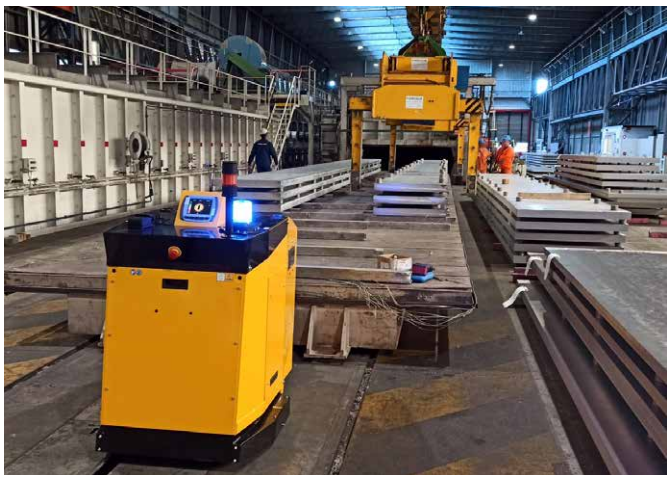

Standard Safety Features

Emergency Stop Button	Flashing Light and Motion Bleeper	Automatic Parking Brake
Warning Horn	**Floating Castor Guard**	**Remote Control**
	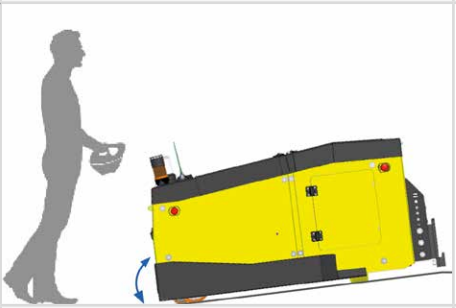	
Display Screen	**Status Light**	**Two Speed Selector Switch**
Auto Hydraulics	**Key Switch**	

Machine Options

Additional AGM Battery **Z80-00300**	Additional Wireless E-Stop **Z80-00509**	Battery Protection System **Z80-00500**
		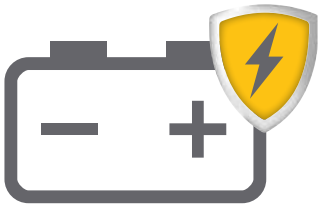

Couplings

CombiCoupling
Z80-00600 male I Z80-00700 female

Smart Coupling†
Z80-00601 male I Z80-00701 female

Smart Adaptor†
Z80-00702 female (coupling not included)

Custom Engineering

We understand that every application is different. Whether it's a custom coupling to connect to your load, modifying our electric tugs to work in a challenging environment, or designing an entirely new solution for your application, our Customer Engineering team are here to help.

For more information on our custom engineering capabilities, please visit: **mastermover.com/custom-solutions**
If you'd like to discuss your requirements, speak to your sales representative or email: **sales@mastermover.com**

†MultiLink only.

Technical Specification

Machine	
Product code	Z80-00100
Maximum load (on castors I on rails)	8,000 kg I 32,000 kg
Maximum force (push I pull)	5,493 N I 5,493 N
Machine weight	551 kg
Battery weight (standard)	170 kg
Combined machine & battery weight	721 kg
Drive type	Electric
Braking	Regenerative
Parking brake	Electromagnetic
Drive wheel type	Non-marking Polyurethane
Castor wheel type	Non-marking Polyurethane
Drive wheel diameter	260 mm
Point loading	0.40 (kg/mm²) 3.90 [N/mm²]
Drive motor power	2.5 kW
Controller type	AC
Hare mode speed (With two speed selector switch)	4 KPH
Tortoise mode speed (With two speed selector switch)	2 KPH
Maximum slope*	8°
Voltage	24 v
Noise level	Motor ≤80 dBA I Flashing light ≤85 dBA I Horn ≤112 dBA
Metal work finish	Powder coat paint & zinc plated
IP rating	IP44
Hydraulic Specification	
Maximum Lift Force at the Coupling	1,300 kg
AGM Battery	
Product code	Z80-00300
Battery pack capacity	204 Ah
Maximum distance per charge*	11.7 km
Charge time (External charger)	8 hrs
External Charger	
Product code	Z80-00400
Input voltage	85 - 265 v
Hertz	50 - 60 Hz
Amps	30 A
Phase (single, three)	Single
IP Rating	IP30

* Based on 75% of maximum machine load weight on a flat floor on castors.

Technical Specification

Coupling	
CombiCoupling (male I female)	Optional
Smart Coupling† (male I female)	Optional
Smart Adaptor† (female) coupling not included	Optional
Safety	
Key Switch	Standard
Emergency Stop	Standard
Display Screen	Standard
Two Speed Selector Switch	Standard
Automatic Parking Brake	Standard
Warning Horn	Standard
Auto Hydraulics	Standard
Integrated Lift Points	Standard
Integrated Tie-Down Points	Standard
Floating Castor Guard	Standard
Remote Control	Standard
Flashing Safety Light and Motion Bleeper	Standard
Status Light	Standard
Options	
Additional AGM Battery	Optional
Wireless E-Stop	Optional
Battery Protection System	Optional

†MultiLink only.

MasterMover®

mastermover.com

© Copyright 2023

UK CA CE ISO 9001 ISO 45001