AUTHORISED MASTERMOVER DEALER, IRELAND

MasterMover SmartMover SM100 TOW

Product brochure

Supplied, serviced and supported in Ireland by AWE Forklifts

Phone +353 1 401 9919

Email info@awe.ie

Web awe.ie/mastermover?store-page=SmartMover-SM100-TOW-p356720052

Manufacturer brochure follows. Contact AWE for a written quote, demo or on-site visit.

MasterMover®

SM100 TOW

Battery powered electric tug

SM100 TOW

kg
500

Overview

Easily move heavy wheeled loads with the SmartMover range. Delivering effortless pushing, pulling and steering, the SmartMover improves safety, removes manual handling and drives operational efficiency.

With robust yet simple coupling systems, the SmartMover range ensures loads are secure and gives operators complete control – even on slopes. Safety-focused, SmartMover electric tugs feature anti-crush functionality, emergency stop, variable speed settings and intuitive controls to keep operators, loads and equipment safe.

Benefit from versatility with various coupling options available, including a hydraulic clamp that delivers total load security.

Key Features

Safety

- Audible horn, flashing beacon, performance monitoring and emergency stop
- Intuitive parking brake stops loads, even on slopes
- Multiple speed settings for maximum control

Performance

- Two high-powered motors for consistent performance
- 180° steering angle provides precise handling
- Powerful performance both indoors, outdoors and on slopes

Power

- Interchangeable, maintenance-free batteries for 24/7 operation
- Power display for real-time data
- Smart charging system to maximum battery longevity

Connection

- Secure and easy-to-use coupling options, including hydraulics
- Variable coupling options for maximum flexibility
- Custom couplings available

MasterMover

Dimensions

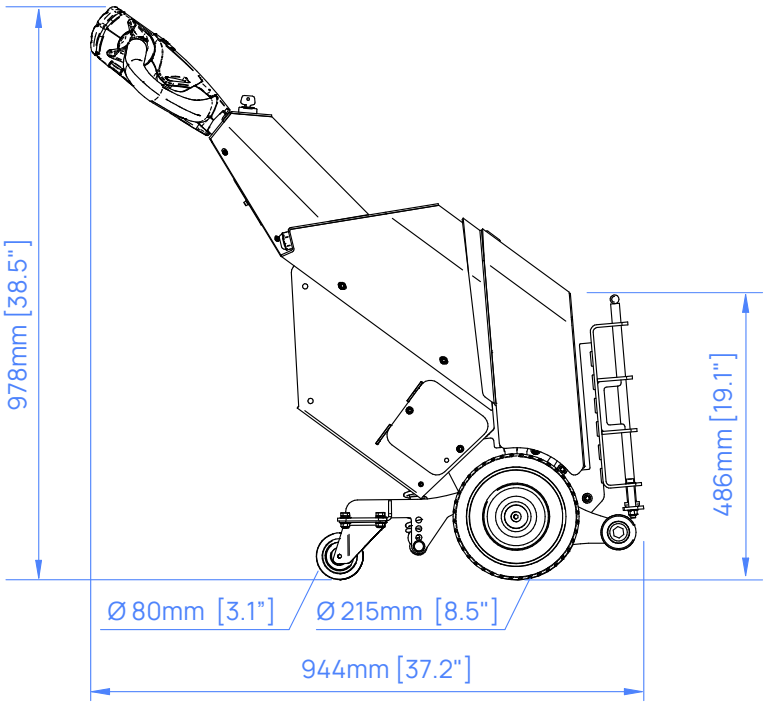
978mm [38.5"]
486mm [19.1"]
Ø 80mm [3.1"]
Ø 215mm [8.5"]
944mm [37.2"]

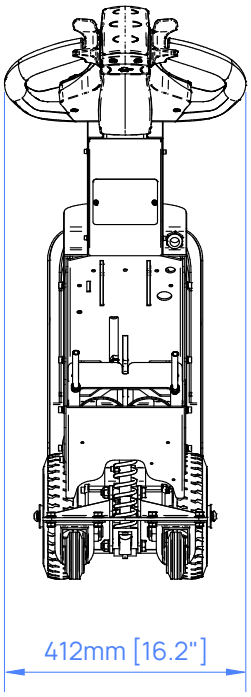
412mm [16.2"]

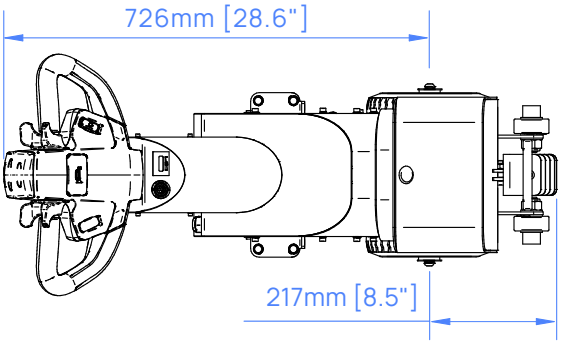
726mm [28.6"]
217mm [8.5"]

In Application: SmartMover

Machine Safety Features

Anti-Crush Button	Warning Horn	Automatic Parking Brake
Battery Display Indicator	**Key Switch**	**Magnet Lock**
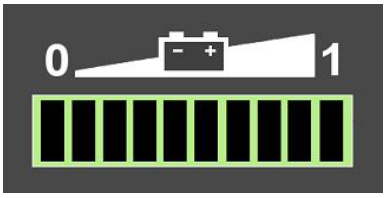		

Machine Options

Additional AGM Battery **Z19-00304**	Flashing Light & Motion Beeper **Z19-00511**	Two Speed Selector Switch
Battery Protection System		
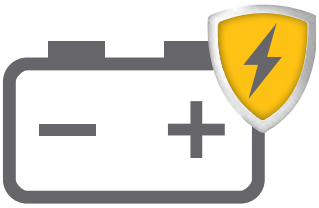		

Couplings

Pin Coupling
Z19-00616 male

Custom Engineering

We understand that every application is different. Whether it's a custom coupling to connect to your load, modifying our electric tugs to work in a challenging environment, or designing an entirely new solution for your application, our Customer Engineering team are here to help.

For more information on our custom engineering capabilities, please visit: **mastermover.com/custom-solutions**
If you'd like to discuss your requirements, speak to your sales representative or email: **sales@mastermover.com**

Technical Specification

Machine	
Product code	Z19-00126
Maximum load (on castors I on rails)	500 kg I 2,000 kg
Maximum force (push I pull)	981 N I 981 N
Machine weight	108 kg
Battery weight (standard)	17 kg
Combined machine & battery weight (standard)	125 kg
Drive type	Twin Electric Motor
Braking	Regenerative
Parking brake	Electromagnetic
Drive wheel type	Non-Marking Rubber
Castor wheel type	Non-Marking Polyurethane
Drive wheel diameter	220 mm
Drive motor power	2 x 0.22 kW
Controller type	DC
Standard machine speed	4.2 KPH
Hare mode speed (With two speed selector switch)	5.4 KPH
Tortoise mode speed (With two speed selector switch)	1.8 KPH
Maximum slope	10°
Voltage	24 v
Noise level	Motor ≤80 dBA I Flashing light ≤85 dBA I Horn ≤112 dBA
Metal work finish	Powder coat paint & zinc plated
IP rating	IP42
AGM Battery	
Product code	Z19-00304
Battery pack capacity	22 Ah
Maximum distance per charge*	15.1 km
Charge time	4 hrs 30 mins
External Charger	
Product code	Z19-00406
Input voltage	85 - 265 v
Hertz	50 - 60 Hz
Amps	5 A
Phase (single, three)	Single
IP Rating	IP30

* Based on 75% of maximum machine load weight on a flat floor on castors.

Technical Specification

Lithium Battery	
Product code	Z19-00310
Battery pack capacity	39 Ah
Maximum distance per charge*	25 km
Charge time (External charger)	1 hrs 45 mins
External Charging	
Product code	Z19-00407
Input voltage	85 - 265 v
Hertz	50 - 60 Hz
Amps	25 A
Phase (single, three)	Single
IP rating	IP30
Coupling	
Pin Coupling (male)	Optional
Safety	
Key Switch	Standard
Automatic Parking Brake	Standard
Battery Discharge Indicator	Standard
Anti-Crush Button	Standard
Warning Horn	Standard
Magnet Lock	Standard
Options	
Additional AGM Battery	Optional
Flashing Safety Light and Motion Bleeper	Optional
Battery Protection System	Standard
Two Speed Selector Swtich	Standard

* Based on 75% of maximum machine load weight on a flat floor on castors.

MasterMover®

mastermover.com

© Copyright 2023

UK CA CE ISO 9001 ISO 45001